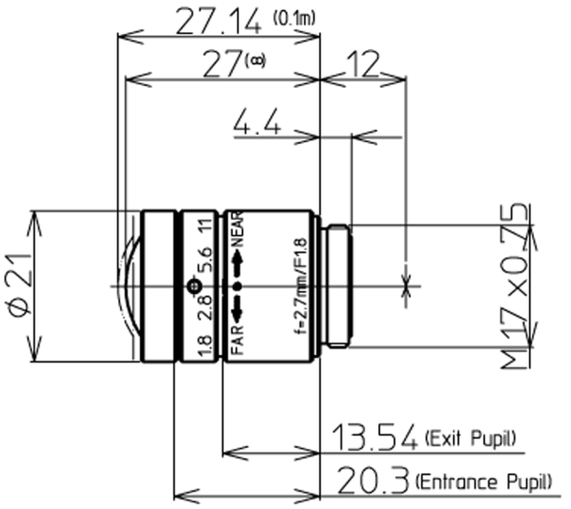

1/3" F1.8/2.7mm		
FOCAL LENGTH		f=2.7mm
MAX. DIAMETER (RATIO)		F=1:1.8~11
PICTURE SIZE		1/3" (4.8x3.6mm)
ANGLE	VER. ANGLE	75.5°
	HOR. ANGLE	100.8°
	DIA. ANGLE	125.9°
DISTORTION (TV)		-7.3%
SHOOTING RANGE AT MINIMUM FOCUS DISTANCE	VER.	164mm
	HOR.	256mm
	DIA.	412mm
MINIMUM FOCUS DISTANCE		0.1m
FLANGE BACK		12mm in air
BACK FOCUS		7.83mm in air
FILTER SCREW SIZE		---
FRONT/REAR EFFECTIVE DIA.		Front Φ16.2mm Rear Φ8.4mm
MOUNT		NF-MOUNT (M17x0.75)
EXIT PUPIL		-17.9mm
TEMPERATURE RANGE		-10~+50° C
STORING TEMPERATURE RANGE		-20~+60° C
RESOLUTION CENTER/CORNER		Center 80lp/mm Corner 80lp/mm
WEIGHT		26g

Kowa

		LM3NF		
12.24.09		1/3" F1.8 f=2.7mm		