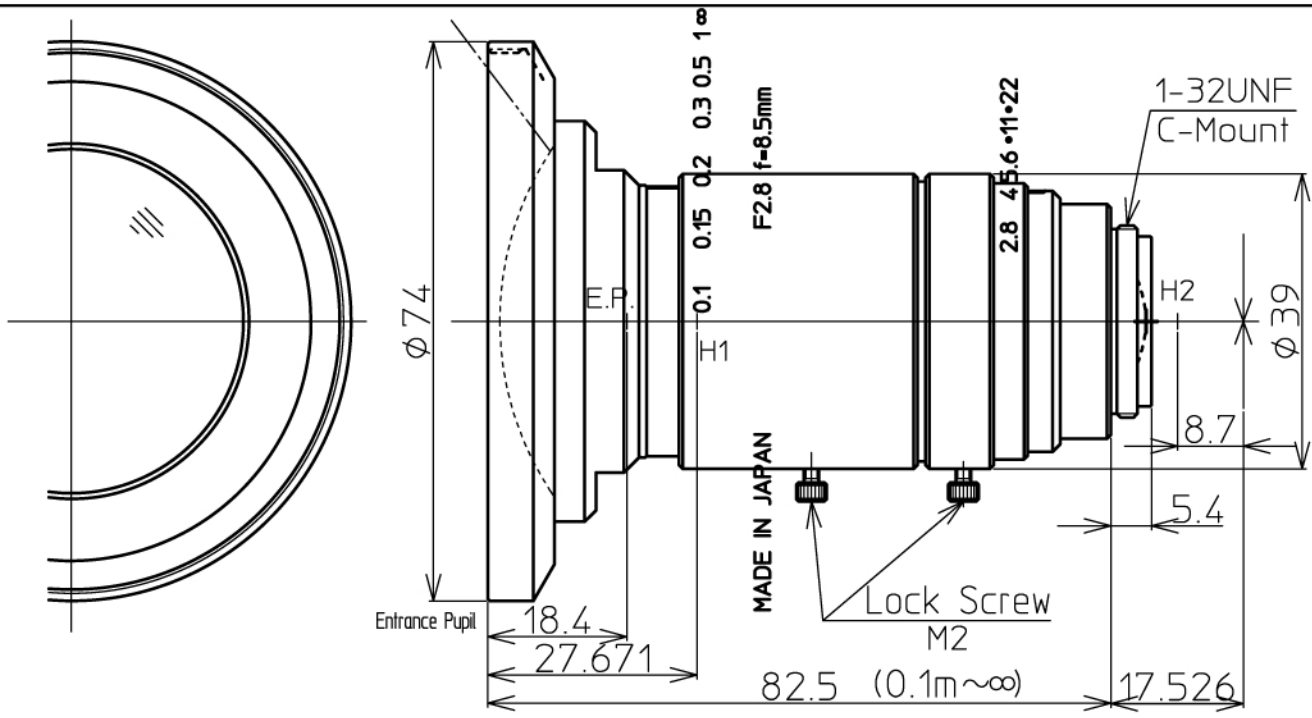

φ23 2.8/8.5mm C		
FOCAL LENGTH		f=8.5mm
MAX. DIAMETER (RATIO)		F=1:2.8~22
ELEMENT		14 GROUPS 17 ELEMENTS
PICTURE SIZE		13.8x18.4mm
ANGLE	VER. ANGLE	77.1°
	HOR. ANGLE	93.5°
	DIA. ANGLE	106.0°
DISTORTION (TV)		0.12% (WD=300mm)
SHOOTIG RANGE AT	VER.	179mm
MINIMUM FOCUS	HOR.	239mm
DISTANCE	DIA.	298m
MINIMUM FOCUS DISTANCE		0.1m
FLANGE BACK		17.526mm in air
BACK FOCUS		12.9mm in air
FILTER SCREW SIZE		M72×075
FRONT/REAR EFFECTIVE DIA.		FRONT φ45.5mm REAR φ16.5mm
MOUNT		C-MOUNT
EXIT PUPIL		-75.1mm
TEMPERATURE RANGE		-10~+50° C
STORAGE TEMPERATURE RANGE		-20~+60° C
RESOLUTION CENTER/CORNER		Center 160lp/mm Corner 80lp/mm
LENS COATING		WIDE BAND MULTI COATING
WEIGHT		245g

NOTE:Specifications and availability are subject to change without notice

注）本仕様については、予告なしに変更する場合があります。

		尺度 1/1	承認 八木	製図 大口
		φ23 F2.8 f=8.5mm		
2013.4.15	作成年月日	LM8XC		