SENTECH

GigE Vision 3.2 & 5 MP CMOS
Product Specifications

Features
- GigE Vision Compatibility
- 3.2 & 5.0 MP CMOS Sensor
- 33.3 & 21 FPS
- Power over Ethernet
- Global Shutter

Product Precautions

- **Handle the camera with care. Do not abuse the camera. Avoid striking or shaking it. Improper handling or storage could damage the camera.**
- **Do not pull or damage the camera cable.**
- **During camera use, do not wrap the unit in any material. This will cause the internal temperature of the unit to increase.**
- **Do not expose the camera to moisture, or do not try to operate it in wet areas.**
- **Do not operate the camera beyond its temperature, humidity and power source ratings.**
- **While the camera is not being used, keep the lens or lens cap on the camera to prevent dust or contamination from getting in the Sensor or filter area and scratching or damaging this area.**
- **Do not keep the camera under the following conditions:**
  - **In wet, moist, and high humidity areas**
  - **Under hot direct sunlight**
  - **In high temperature areas**
  - **Near an object that releases a strong magnetic or electric field**
  - **Areas with strong vibrations**
- **Apply the power that satisfies the requirements specified in this document to the camera.**
- **Use a soft cloth to clean the camera. Use pressured air spray to clean the surface of the glass. DO not scratch the surface of the glass.**
- **The camera is a general-purpose electronic device; using the camera for the equipment that may threaten human life or cause dangers to human bodies directly in case of failure or malfunction of the camera is not guaranteed. Use the camera for special purposes at your own risk.**

Phone +66 87 803 1661 | www.imRNasia.com | sale@imRNasia.com

Table of Contents

1 INTRODUCTION 6

1.1 Features 6

1.2 Naming Method 6

2 SPECIFICATIONS 7

2.1 Electronic Specifications 7

2.1.1 STC-SBS312POE / STC-SCS312POE 7
2.1.2 STC-SBS500POE / STC-SCS500POE 8

2.2 Spectral Sensitivity Characteristics 9

2.2.1 STC-SBS312POE 9
2.2.2 STC-SCS312POE (Sensor spectral response, without IR cut filter) 9
2.2.3 STC-SBS500POE 10
2.2.4 STC-SCS500POE (Sensor spectral response, without IR cut filter) 10

2.3 Mechanical Specifications 11

2.3.1 STC-SBS312POE / STC-SCS312POE 11
2.3.2 STC-SBS500POE / STC-SCS500POE 11

2.4 Environmental Specifications 12

2.4.1 STC-SBS312POE / STC-SCS312POE 12
2.4.2 STC-SBS500POE / STC-SCS500POE 12
Upper side of camera 12

3 CONNECTOR SPECIFICATIONS 13

3.1 RJ45 Connector 13

3.2 Power and Control Signal Connector 14

3.2.1 Equivalent Circuit for the Input Pin of the I/O Connector 16
3.2.2 Typical Input Circuit 17
3.2.3 Typical Output Circuit 18
3.2.4 Input and Output Signal Timing (Hardware Trigger) 19
3.2.5 Input and Output Signal Timing (Software Trigger) 20

4 DIMENSIONS 22

4.1 STC-SBS312POE / STC-SBS500POE 22

4.2 STC-SCS312POE / STC-SCS500POE 23

Phone +66 87 803 1661 | www.imRNasia.com | sale@imRNasia.com

5 SENSOR INFORMATION 24

5.1 Pixel Transferring Image 24

6 CAMERA OPERATIONAL MODES 25

6.1 Normal Mode 25

6.2 Pulse width trigger mode 25

6.2.1 Timing 25
6.2.2 Exposure Timing with the Positive Polarity Trigger Signal 26
6.2.3 Exposure Timing with the Negative Polarity Trigger Signal 26

6.3 Edge Preset Trigger Mode 27

6.3.1 Timing 27
6.3.2 Exposure Timing with the Positive Polarity Trigger Signal 28
6.3.3 Exposure Timing with the Negative Polarity Trigger signal 28

6.4 Edge Preset Trigger Mode (Trigger Input While the Image Is Out) 29

6.4.1 Timing 29

7 CAMERA OPERATION 30

7.1 GenICam command list 30

7.2 Save and load the camera setting data 33

7.2.1 The camera settings saving 33
7.2.2 The camera settings loading 34
7.2.3 The camera settings loading when the camere power is on. 34
7.2.4 The camera settings initialization 34

7.3 Gain 35

7.3.1 Analog gain 35
7.3.2 Digital gain 35

7.4 Black level 35

7.5 ALC (Auto Light Control) 36

7.5.1 ALC control method 37
7.5.2 AGC (Auto Gain Contorl) 37
7.5.3 Auto shutter 38
7.5.4 ALC settings procedure 38

7.6 White balance (Only available for the color cameras) 39

7.6.1 White balance control methods 39
7.6.2 OFF 39
7.6.3 Auto white balance 40
7.6.4 Push to set white balance 40

Phone +66 87 803 1661 | www.imRNasia.com | sale@imRNasia.com

7.6.5 Preset white balance1 to 3 40
7.6.6 White balance calculate area setting 41
7.7 Gamma correction 42
7.7.1 Gamma table writing 42
7.8 ROI (Region of Interest) 43
7.9 Trigger 44
7.9.1 Trigger signal processing procedure 44
7.1 The camera settings (GenICam parameters) control with SDK 45
7.1.1 Integer type parameter control 45
7.1.2 Float type parameter control 45
7.1.3 Enumeration type parameter control 45
7.1.4 String type paramter control 46
7.1.5 Boolean type parameter control 46
7.1.6 Command type paramter control 46
8 REVISION HISTORY 47

1 Introduction

This document describes the specification of the following cameras:

STC-SBS312POE	(3.2MP Monochrome)
STC-SCS312POE	(3.2MP Color)
STC-SBS500POE	(5.0MP Monochrome)
STC-SCS500POE	(5.0MP Color)

1.1 Features

- CMOS (Global Shutter)
- GigE Interface
- PoE (Power over Ethernet) is Supported
- The maximum allowed frame rate is 3.2M: 33.3fps, 5.0M: 21 fps

1.2 Naming Method

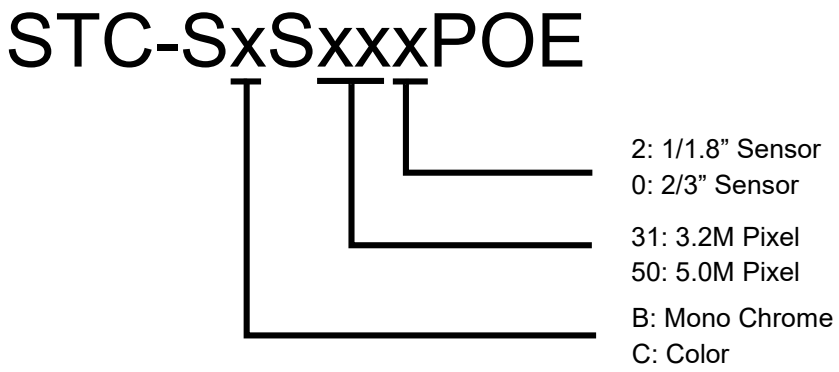

Figure 1: Naming Method

2 Specifications

2.1 Electronic Specifications

2.1.1 STC-SBS312POE / STC-SCS312POE

製品		STC-SBS312POE	STC-SCS312POE
Imager		1/1.8” 3.2 MP monochrome progressive CMOS (Sony: IMX265)	1/1.8” 3.2 MP color progressive CMOS (Sony: IMX265)
Shutter Type		Global Shutter	
Active Picture Elements		2048 (H) x 1536 (V)	
Cell Size		3.45 (H) x 3.45 (V) μm	
Scanning System		Progressive	
Scanning mode		Full scanning (Full resolution) / ROI	
Frame rate		8bit:33.3 fps、10bit:16.6fps、10bitPacked:22.2fps、12bit:16.6fps、12bitPacked:22.2fps Maximum frame rate is 2083fps@264 x 4(8bit)	
ADC bit depth		12bit	
Video Output Format		**Mono8**,Mono10,Mono10Packed, Mono12,Mono12Packed	BayerBG8, BayerBG10, BayerBG10Packed, BayerBG12, BayerBG12Packed
Noise Level	@ 8bit output	≤3 Digit (Gain 0 dB)	
	@ 10bit output	≤12Digit (Gain 0 dB)	
	@ 12bit output	≤48Digit (Gain 0 dB)	
Sensitivity		300 Lux	780 Lux
ALC		Auto shutter / Auto gain (AGC) / OFF (**Default: Auto shutter OFF, AGC OFF**)	
Electronic Shutter		28 useconds to 16,777,215 useconds (8bit) 32 useconds to 16,777,215 useconds (10bit,12bit)	
Gain	Analog	0 to 20.8 dB (**Default: 0dB)**	
	Digital	0 to 6 dB (**Default: 0dB)**	
ROI		Horizontal: 264 to 2048 pixels / Vertical: 4 to 1536 pixels (Default: 2048 x 1536) Adjustable steps for the image size: 8 pixels in horizontal direction and 2 lines in vertical direction Adjustable steps for the offset: 8 pixels in horizontal direction and 2 lines in vertical direction	
Gamma		Gamma 1.0 or uploadable gamma table (**Default:1.0**)	
Binning Function		Not supported	
Decimation Function		Individual x2 Horizontal, Vertical decimation	
Mirror image		Horizontal / Vertical / Horizontal and vertical / Off (**Default: Off**)	
Pixel Blemish Correction		Up to 64 points	
White Balance		N/A	Auto / Manual / Push to Set (**Default: Manual**)
Operational Mode		Edge preset trigger / Pulse width trigger(more than 13.3333uS(8bit), 17.77778uS(10bit,12bit))	
Communication		UART communication through Ethernet port	
Interface		IEEE802.3af CLASS2 (1000BASE-T)	
Protocol		GigE Vision® 1.2 and GenICam™ Standard Version 2.1 (SFNC 1.4)	
I/O		One opt-isolated input and two open collector outputs	
Power	Input Voltage	+10.8 to +26.4 Vdc	
	Consumption (Max/Default)	+12V: 2.9 W, +24V:3.3 W, PoE: 3.5 W	

Table 1: Electronic Specifications of STC-SBS312POE/ STC-SCS312POE

2.1.2 STC-SBS500POE / STC-SCS500POE

製品		STC-SBS500POE	STC-SCS500POE
Imager		2/3” 5.0 MP monochrome progressive CMOS (Sony: IMX264)	2/3” 5.0 MP color progressive CMOS (Sony: IMX264)
Shutter Type		Global Shutter	
Active Picture Elements		2448 (H) x 2048 (V)	
Cell Size		3.45 (H) x 3.45 (V) μm	
Scanning System		Progressive	
Scanning mode		Full scanning (Full resolution) / ROI	
Frame rate		8bit:21 fps、10bit:10.5fps、10bitPacked:14fps、12bit:10.5fps、12bitPacked:14fps Maximum frame rate is 1762fps@264 x 4(8bit)	
ADC bit depth		12bit	
Video Output Format		**BayerBG8**, BayerBG10, BayerBG10Packed, BayerBG12, BayerBG12Packed	**Mono8**,Mono10,Mono10Packed, Mono12,Mono12Packed
Noise Level	@ 8bit output	≤3 Digit (Gain 0 dB)	
	@ 10bit output	≤12Digit (Gain 0 dB)	
	@ 12bit output	≤48Digit (Gain 0 dB)	
Sensitivity		300 Lux	780 Lux
ALC		Auto shutter / Auto gain (AGC) / OFF (**Default: Auto shutter OFF, AGC OFF**)	
Electronic Shutter		30 useconds to 16,777,215 useconds (8bit) 35 useconds to 16,777,215 useconds (10bit,12bit)	
Gain	Analog	0 to 20.8 dB (**Default: 0dB)**	
	Digital	0 to 6 dB (**Default: 0dB)**	
ROI		Horizontal: 264 to 2048 pixels / Vertical: 4 to 1536 pixels (Default: 2048 x 1536) Adjustable steps for the image size: 8 pixels in horizontal direction and 2 lines in vertical direction Adjustable steps for the offset: 8 pixels in horizontal direction and 2 lines in vertical direction	
Gamma		Gamma 1.0 or uploadable gamma table (**Default:1.0**)	
Binning Function		Not supported	
Decimation Function		Individual x2 Horizontal, Vertical decimation	
Mirror image		Horizontal / Vertical / Horizontal and vertical / Off (**Default: Off**)	
Pixel Blemish Correction		Up to 64 points (**Default: ON**)	
White Balance		N/A	Auto / Manual / Push to Set (**Default: Manual**)
Operational Mode		Edge preset trigger / Pulse width trigger(more than 13.3333uS(8bit), 17.77778uS(10bit,12bit))	
Communication		UART communication through Ethernet port	
Interface		IEEE802.3af CLASS2 (1000BASE-T)	
Protocol		GigE Vision® 1.2 and GenICam™ Standard Version 2.1 (SFNC 1.4)	
I/O		One opt-isolated input and two open collector outputs	
Power	Input Voltage	+10.8 to +26.4 Vdc	
	Consumption (Max/Default)	+12V: 2.9 W, +24V:3.3 W, PoE: 3.5 W	

Table 2: Electronic Specifications of STC-SBS500POE/ STC-SCS500POE

2.2 Spectral Sensitivity Characteristics

2.2.1 STC-SBS312POE

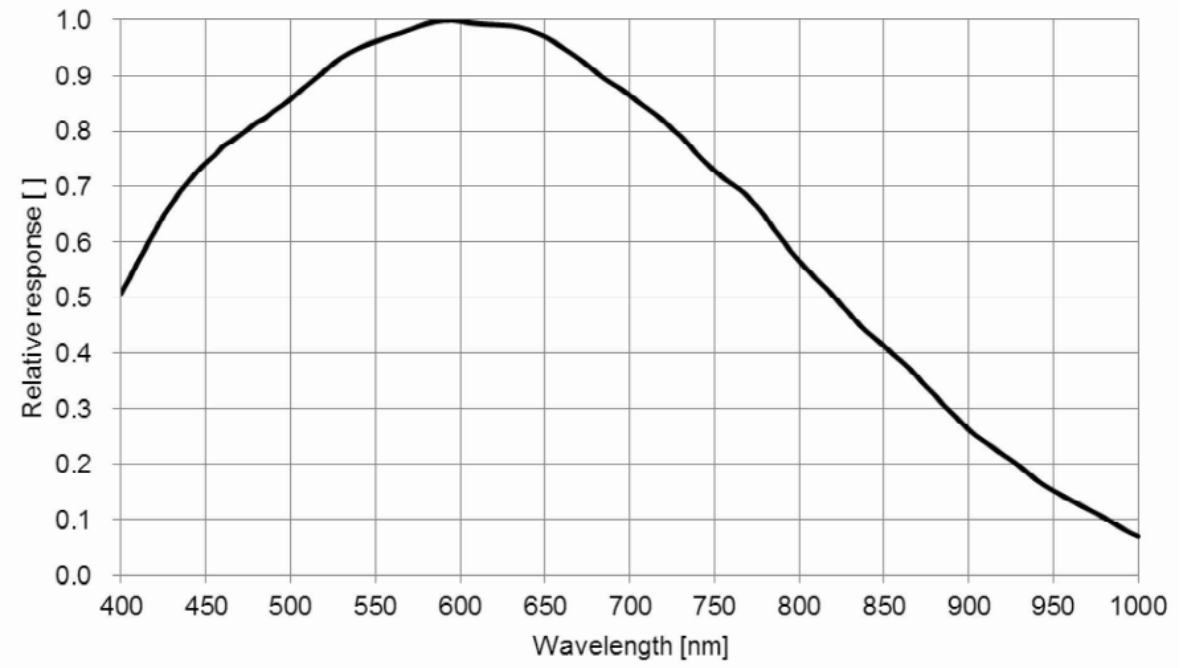

Figure 2: Sensor Spectral Response (Mono)

2.2.2 STC-SCS312POE (Sensor spectral response, without IR cut filter)

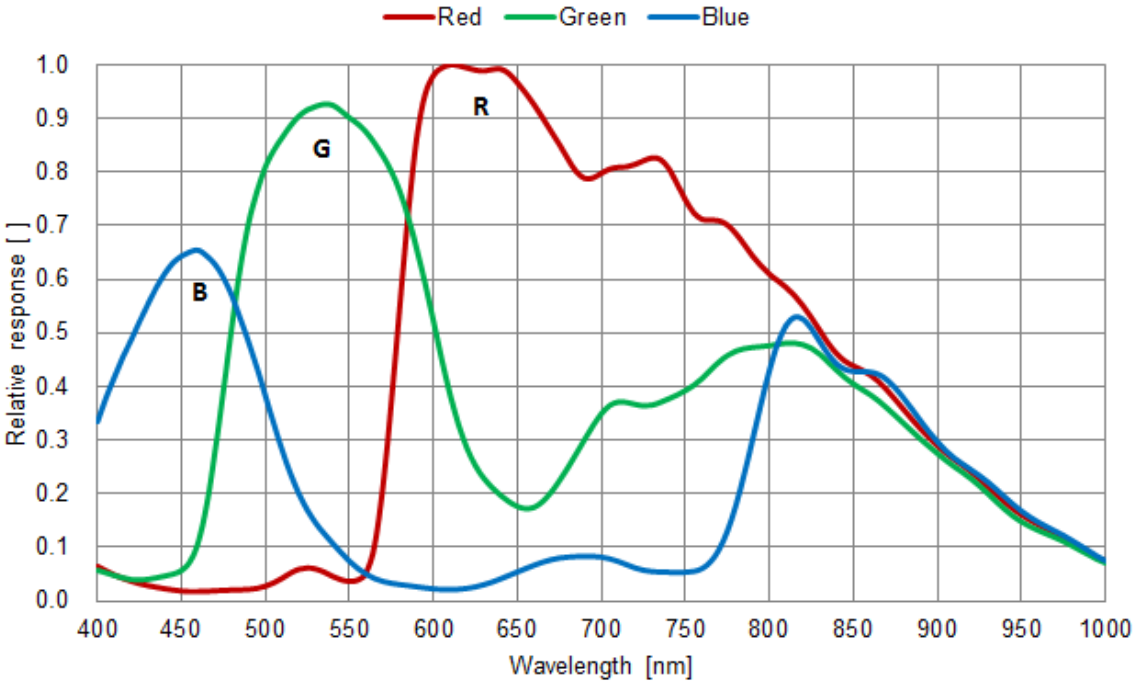

Figure 3: Sensor Spectral Response (Color)

2.2.3 STC-SBS500POE

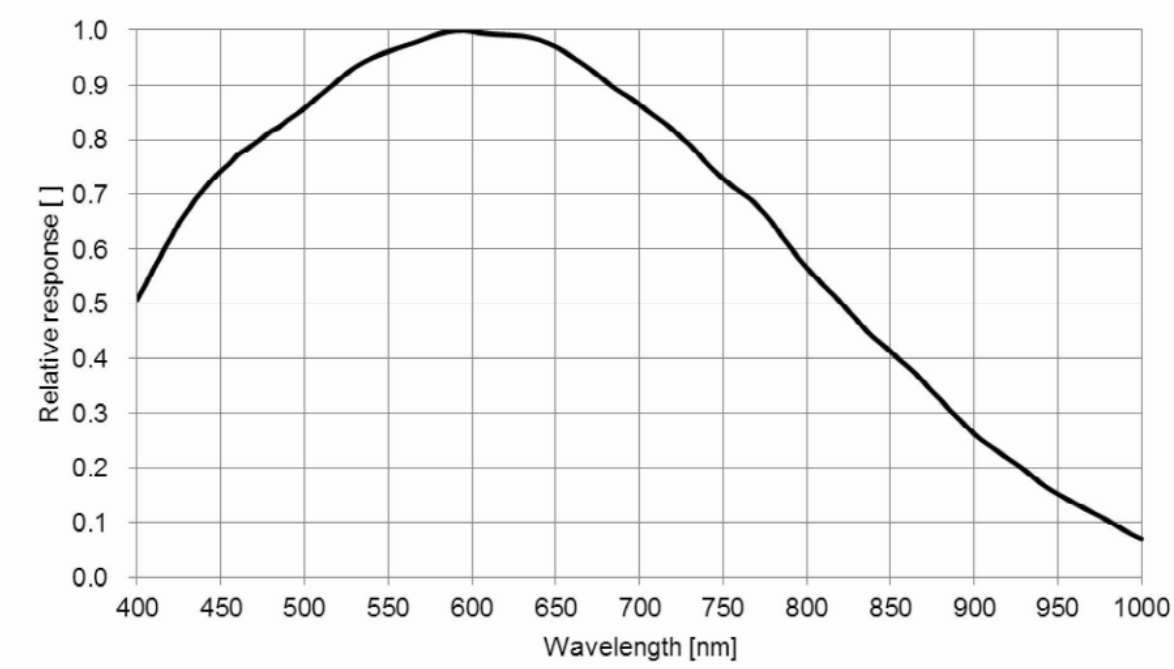

2.2.4 STC-SCS500POE (Sensor spectral response, without IR cut filter)

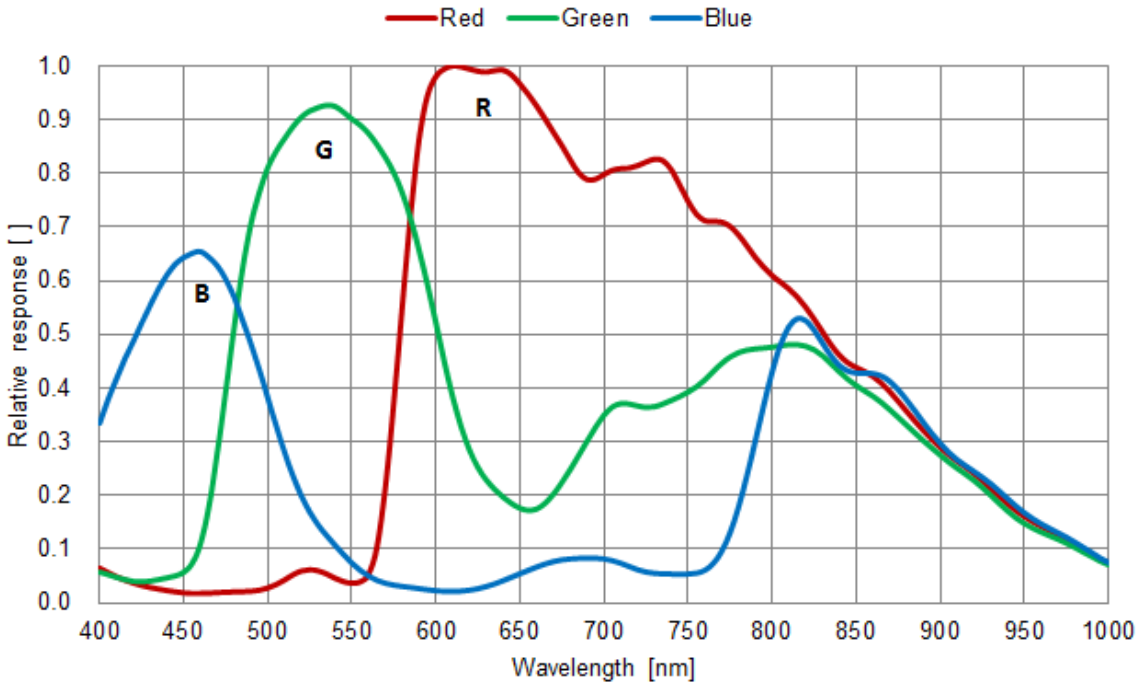

2.3 Mechanical Specifications

2.3.1 STC-SBS312POE / STC-SCS312POE

Model Number	STC-SBS312POE	STC-SCS312POE
Dimensions	35 (W) x 35 (H) x 53.4 (D) mm *	35 (W) x 35 (H) x 53.7 (D) mm *
Optical Filter	No Filter	IR cut filter
Optical Center Accuracy	Positional accuracy in Horizontal and Vertical directions:: ±0.3 mm Rotational accuracy of Horizontal and Vertical: ±2.0 deg.	
Material	Aluminum Alloy(AC)	
Lens Mount	C mount	
Connectors	RJ45 connector Power- I/O connector: HR10A-7R-6PB (Hirose) or equivalent	
Camera Mount Screws	Two 1/4" Tripod screw holes: (One on each top and bottom plate), Twelve M4 screws holes: (Four on each top and bottom plate, two on each side plate)	
Weight	**Approximately 100** g	

* excluding connector

Table 2: Mechanical Specifications

2.3.2 STC-SBS500POE / STC-SCS500POE

Model Number	STC-SBS500POE	STC-SCS500POE
Dimensions	35 (W) x 35 (H) x 53.4 (D) mm *	35 (W) x 35 (H) x 53.7 (D) mm *
Optical Filter	No Filter	IR cut filter
Optical Center Accuracy	Positional accuracy in Horizontal and Vertical directions:: ±0.3 mm Rotational accuracy of Horizontal and Vertical: ±2.0 deg.	
Material	Aluminum Alloy(AC)	
Lens Mount	C mount	
Connectors	RJ45 connector Power- I/O connector: HR10A-7R-6PB (Hirose) or equivalent	
Camera Mount Screws	Two 1/4" Tripod screw holes: (One on each top and bottom plate), Twelve M4 screws holes: (Four on each top and bottom plate, two on each side plate)	
Weight	**Approximately 100** g	

* excluding connector

Table 2: Mechanical Specifications

2.4 Environmental Specifications

2.4.1 STC-SBS312POE / STC-SCS312POE

Model Number		STC-SBS312POE / STC-SCS312POE
Operational Temperature	Minimum	Environmental Temperature 0^0C
	Maximum	Camera housing temperature (top plate) shall not exceed 60^0C (This corresponds to an environmental temperature of approximately 43^0C)
Storage temperature		Environmental Temperature: -20^0C to 65^0C
Storage humidity		Less than 85%
Vibration		20Hz to 200Hz to 20Hz (5min./cycle), acceleration 10G, XYZ 3 directions, 30 min. each)
Shock		Acceleration 38G, half amplitude 6ms, XYZ 3 directions, 3 times each
Standard Compliancy		EMS: EN61000-6-2, EMI: EN55011
RoHS		RoHS Compliance

Table 3: Environmental Specifications

2.4.2 STC-SBS500POE / STC-SCS500POE

Model Number		STC-SBS500POE / STC-SCS500POE
Operational Temperature	Minimum	Environmental Temperature 0^0C
	Maximum	Camera housing temperature (top plate) shall not exceed 60^0C (This corresponds to an environmental temperature of approximately 43^0C)
Storage temperature		Environmental Temperature: -20^0C to 65^0C
Storage humidity		Less than 85%
Vibration		20Hz to 200Hz to 20Hz (5min./cycle), acceleration 10G, XYZ 3 directions, 30 min. each)
Shock		Acceleration 38G, half amplitude 6ms, XYZ 3 directions, 3 times each
Standard Compliancy		EMS: EN61000-6-2, EMI: EN55011
RoHS		RoHS Compliance

Table 3: Environmental Specifications

Note: When the camera is used in surrounding temperatures that exceed 40^oC, or when the internal temperature sensor on the camera shows less than 65^oC, the camera housing temperature (top plate) will be less than 60 ^{o}C. Please make sure that the camera is set up to properly radiate heat

Taking these steps will maintain the heat rating of the electronic components of the camera.

Upper side of camera

Measuring point

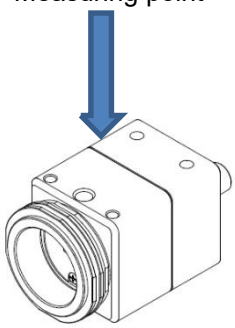

3 Connector Specifications

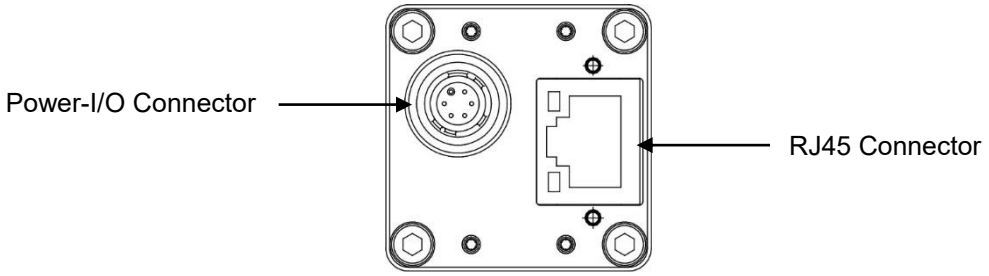

Figure 4: Camera Connector

3.1 RJ45 Connector

This product is PoE compliant.
Please supply power (+10.8 to +26.4Vdc) through the power-I/O connector when using a non-PoE-compliant NIC.

Pin Assignment

Pin No.	Signal Name
1	TA+
2	TA-
3	TB+
4	TC+
5	TC-
6	TB-
7	TD+
8	TD-

LED

Green LED	Orange LED	Status
Green Light ON	Orange Light ON	Power ON(1GB NIC)
Green Light OFF	Orange Light OFF	Power ON(100MB NIC)
Green Light ON	Orange Light Blinking	1Gb Transferring
Green Light OFF	Orange Light Blinking	100 Mb Transferring

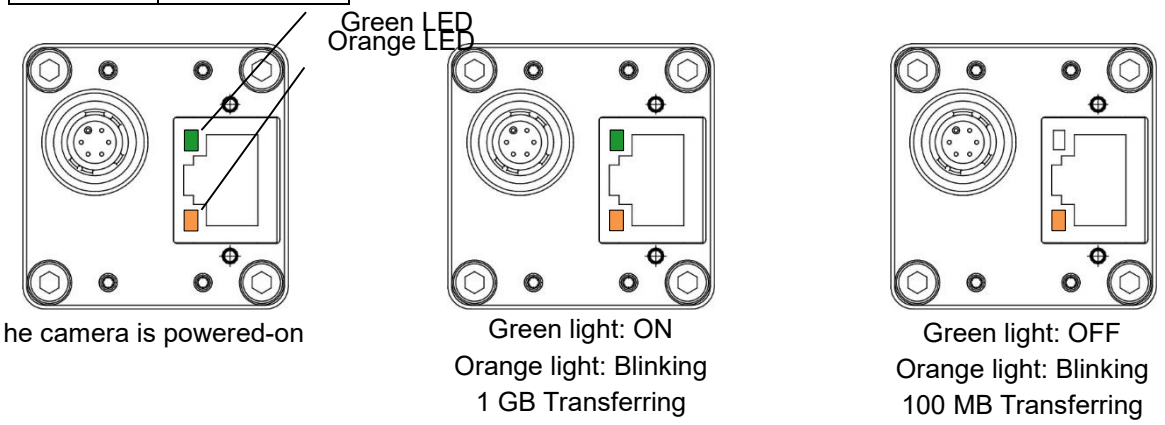

Figure 5: LED Information (on 1GB NIC)

Please use a 1GB supported NIC, NetWork Switcher and LAN cable. Check that the NIC and NetWork Switcher being used is "1GB transferring".
For the detail of Connection, please see "System Configurations (Example Connections)".

3.2 Power and Control Signal Connector

- HR10A-7R-6PB（Hirose）or equivalent
- This connector is for the power supply and input /output signals.
  The power from this connector is priority power for the camera when the power supplies through this connector and PoE at same time.
- Use HR10A-7P-6S (Hirose) or equivalent for the cable side.

Pin No.	Signal Name	IN / OUT	Voltage
1	GND	IN	0V
2	I/O-1	OUT	+3.3V Open Collector
3	I/O-2	OUT	+3.3V Open Collector
4	TRG_In- (Opt. Isolated -)	IN	Low: Smaller than +1.0V High: +3.0 to +26.4V *potential difference between TRG_In- and TRG_In+
5	TRG_In+ (Opt. Isolated +)	IN	
6	POWER IN	IN	+10.8 to +26.4 Vdc

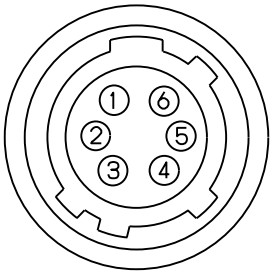

Table 4: Pin Assignment (Power –I/O Connector)

- Output signals can be assigned through the camera setting communication.
  (Device Code = 00H, Command = F0H and F1H)

Configuration of I/O-1 (Pin No.2) and I/O-2 (Pin No.3)

Output pin can be assigned through register setting or GenICam Command.

Command No.				GenICam command
F0H[3..0]	F1[3]	F0H[7..4]	F1[4]	I/O-1 (Pin No.2) / I/O-2 (Pin No.3)
For I/O-1 (Pin No. 2)		For I/O-2 (Pin No.3)		
0H (initial setting)	-	0H	-	FrameTriggerWait (initial setting for I/O-1)
1H	Set Value	1H	Set Value	UserOutput
2H	-	2H (initial setting)		ExposureActive (initial setting for I/O-2)
3H	-	3H	-	TriggerAuxiliary
4H	-	4H		TriggerInternal
5H	-	5H		SensorReadOut
6H	-	6H		StrobeSignal
7H-FH	-	7H-FH	-	For Test Use Only

Table 5: IO port Command List

※ Note: I/O-1 can be assigned only by F0H[3..0] and F1[3], and I/O-2 can be assigned only by F0H[7..4] and F1[4].

1) FrameTriggerWait

The user can check the camera condition (camera exposure and image output processing by the trigger signal with this FrameTriggerWait signal).
This signal is LOW for the period from the trigger input signal to the image output.

a) High status (3.3V): No processing by the trigger signal. The camera accepts the trigger signal.
b) Low status (0V): The camera is exposed and the image output processes by the trigger signal.

The camera default setting is the input trigger signal is INVALID while at the low status of this signal. When the exposure starts while the image output by the next trigger signal, please change the camera setting (Device code: 00H, Command No. :13H) to accept the trigger signal while the image outputs.
The noise appears on the image when the exposure begins while the image is output. The noise appears on the image when the start exposure while the image is output. In this case, please change the “H reset” for the exposure start mode (Device code: 00H, Command No. : 12H) to change the exposure start point to the next HD timing.

2) UserOutput

The status of the UserOutput signal can change with the “UserOutputValue”.

3) ExposureActive

The user can check the exposure time with the ExposureActive signal.

4) TriggerAuxiliary

The TriggerAuxiliary signal is the input trigger signal.

5) TriggerInternal

The TriggerInternal signal is the input trigger signal with the trigger delay time.

6) SensorReadOut

The SensorReadOut signal is the FVAL signal, which is the image output period of the time.

7) StrobeSignal

The StrobeSignal signal is the strobe control signal.

Phone +66 87 803 1661 | www.imRNasia.com | sale@imRNasia.com

3.2.1 Equivalent Circuit for the Input Pin of the I/O Connector

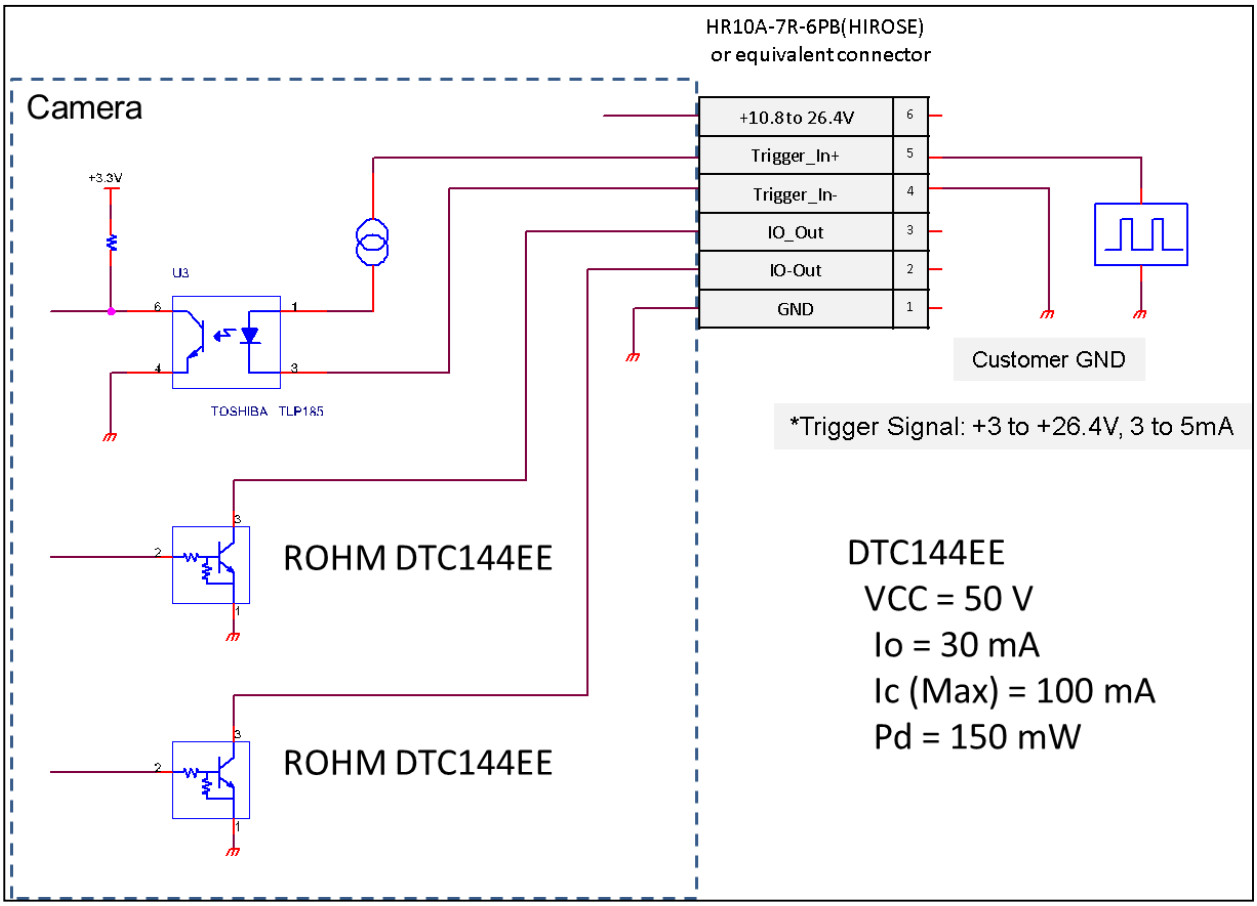

Figure 6: Input / Output Circuit

3.2.2 Typical Input Circuit

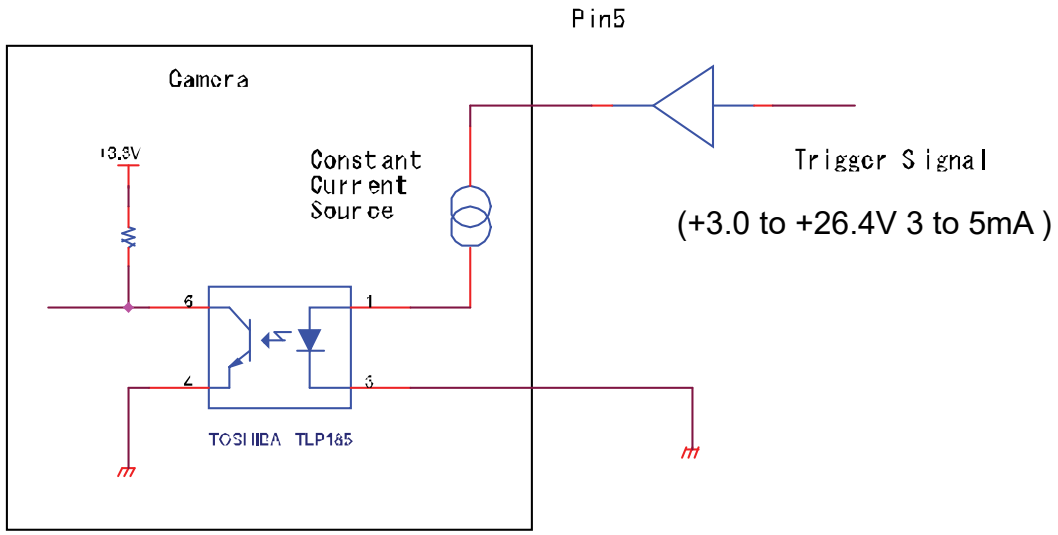

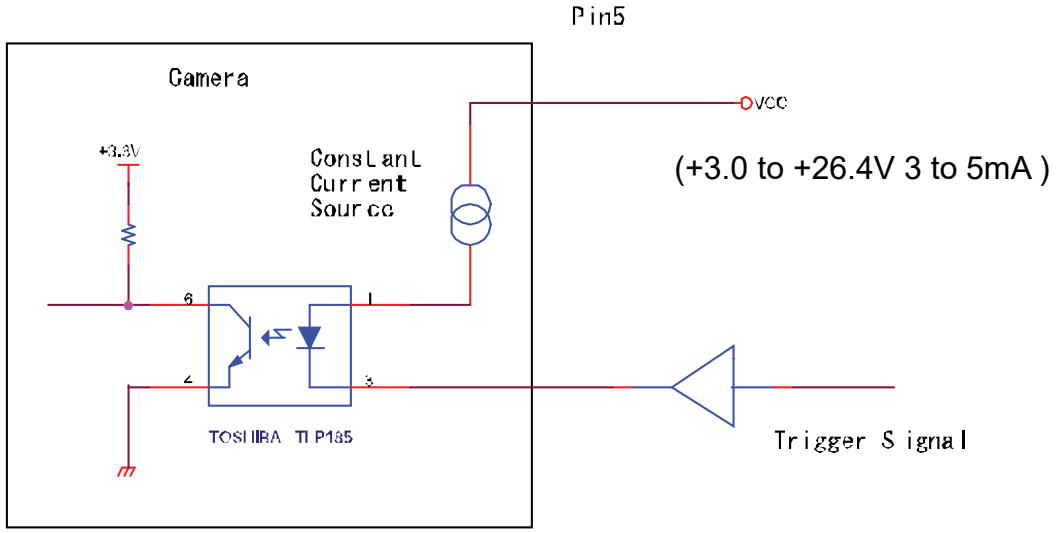

3.2.3 Typical Output Circuit

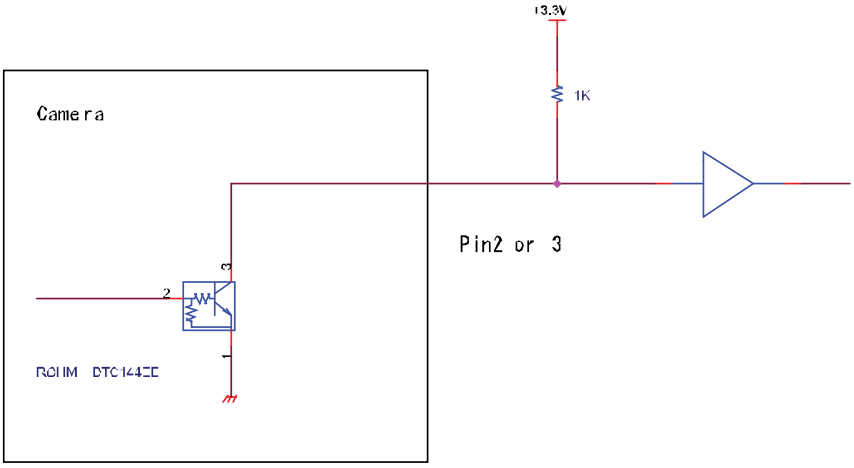

Note:
Value of Vcc and Pull up register can be set within the spec of transistor.

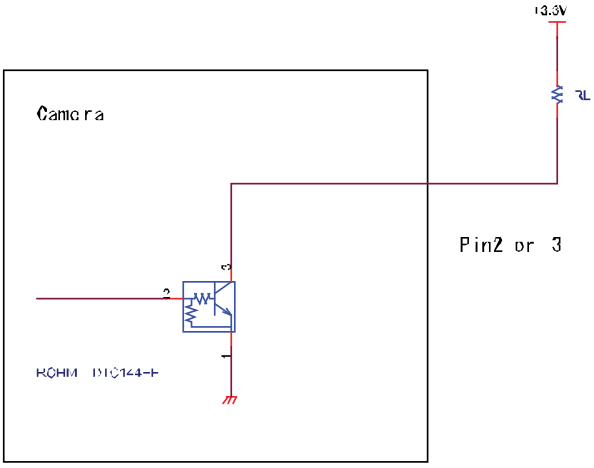

Phone +66 87 803 1661 | www.imRNasia.com | sale@imRNasia.com

3.2.4 Input and Output Signal Timing (Hardware Trigger)

Case of “External Hardware Trigger”, “Positive Edge Trigger”, “Edge Preset Exposure”,

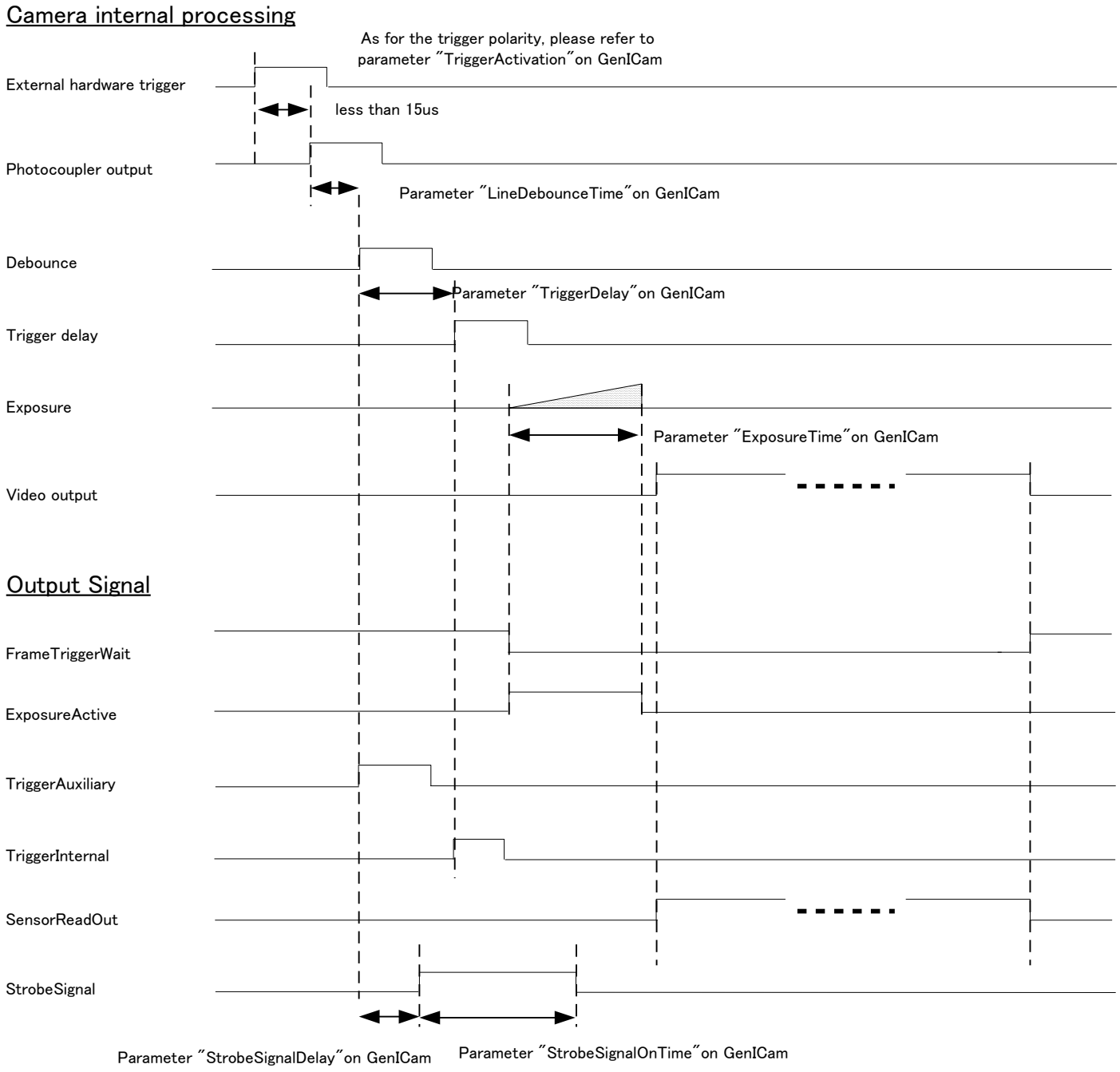

Phone +66 87 803 1661 | www.imRNasia.com | sale@imRNasia.com

3.2.5 Input and Output Signal Timing (Software Trigger)

Case of “Software Trigger”, “Positive Edge Trigger”, “Edge Preset Exposure”,

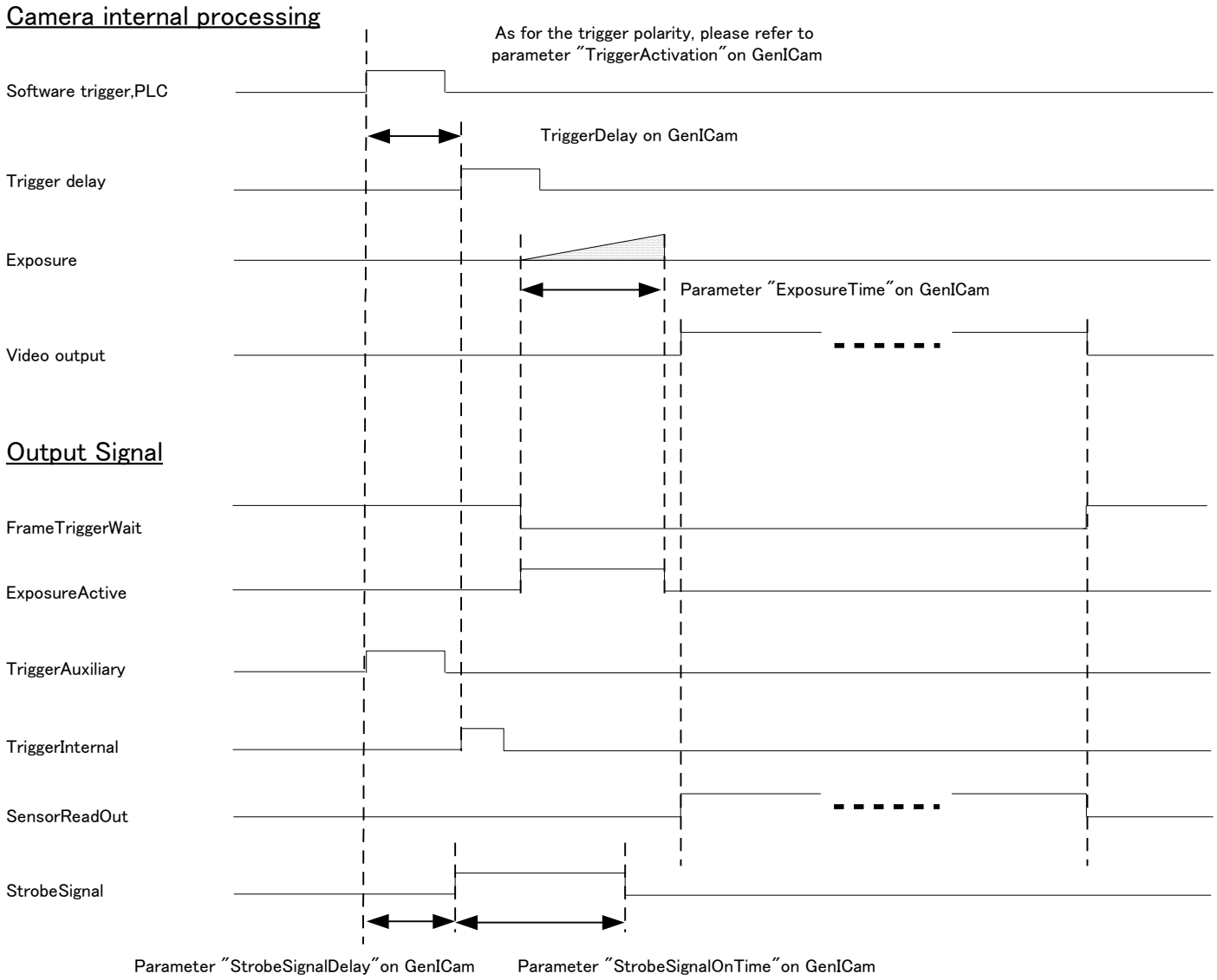

Phone +66 87 803 1661 | www.imRNasia.com | sale@imRNasia.com

Camera internal processing

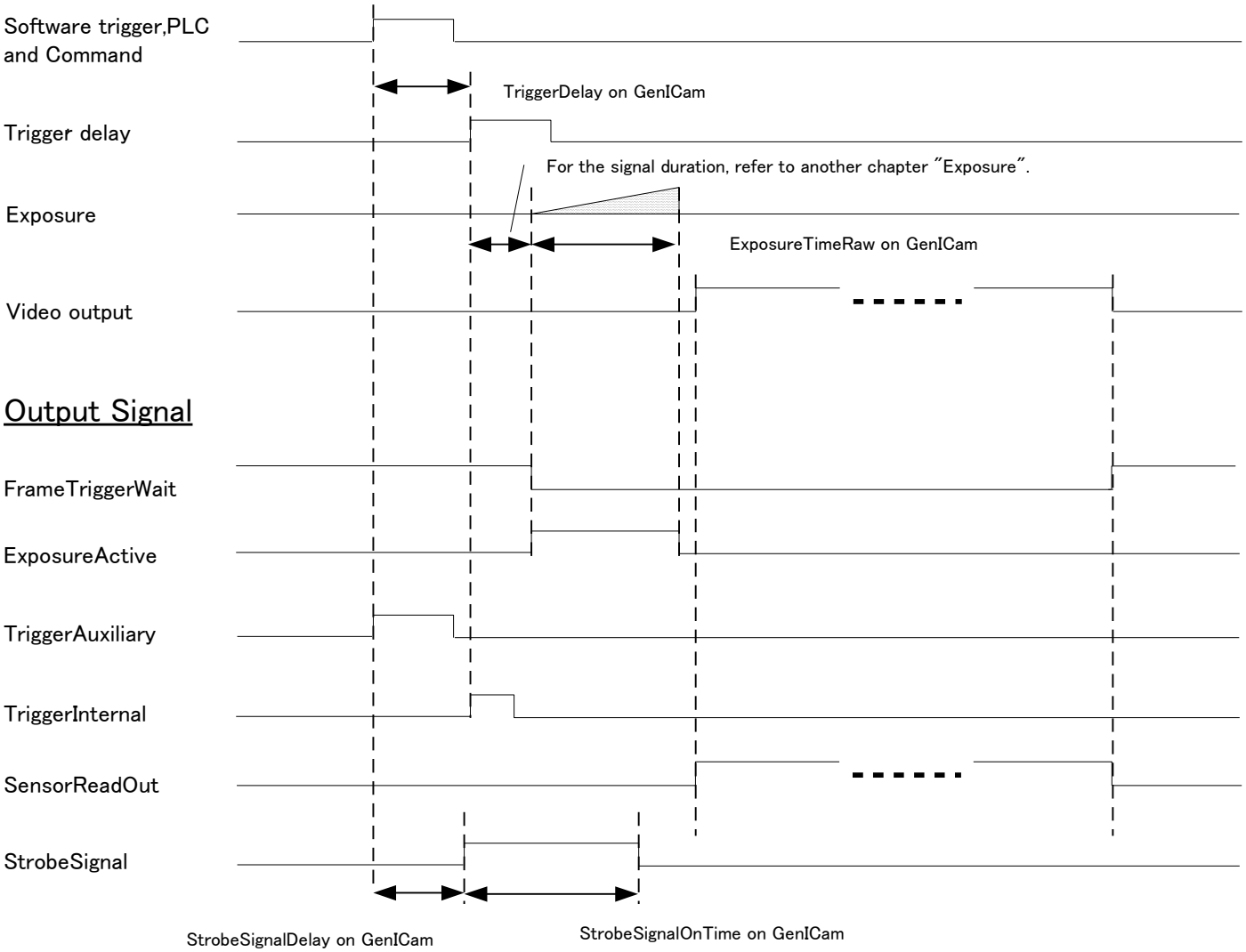

Phone +66 87 803 1661 | www.imRNasia.com | sale@imRNasia.com

4 Dimensions

4.1 STC-SBS312POE / STC-SBS500POE

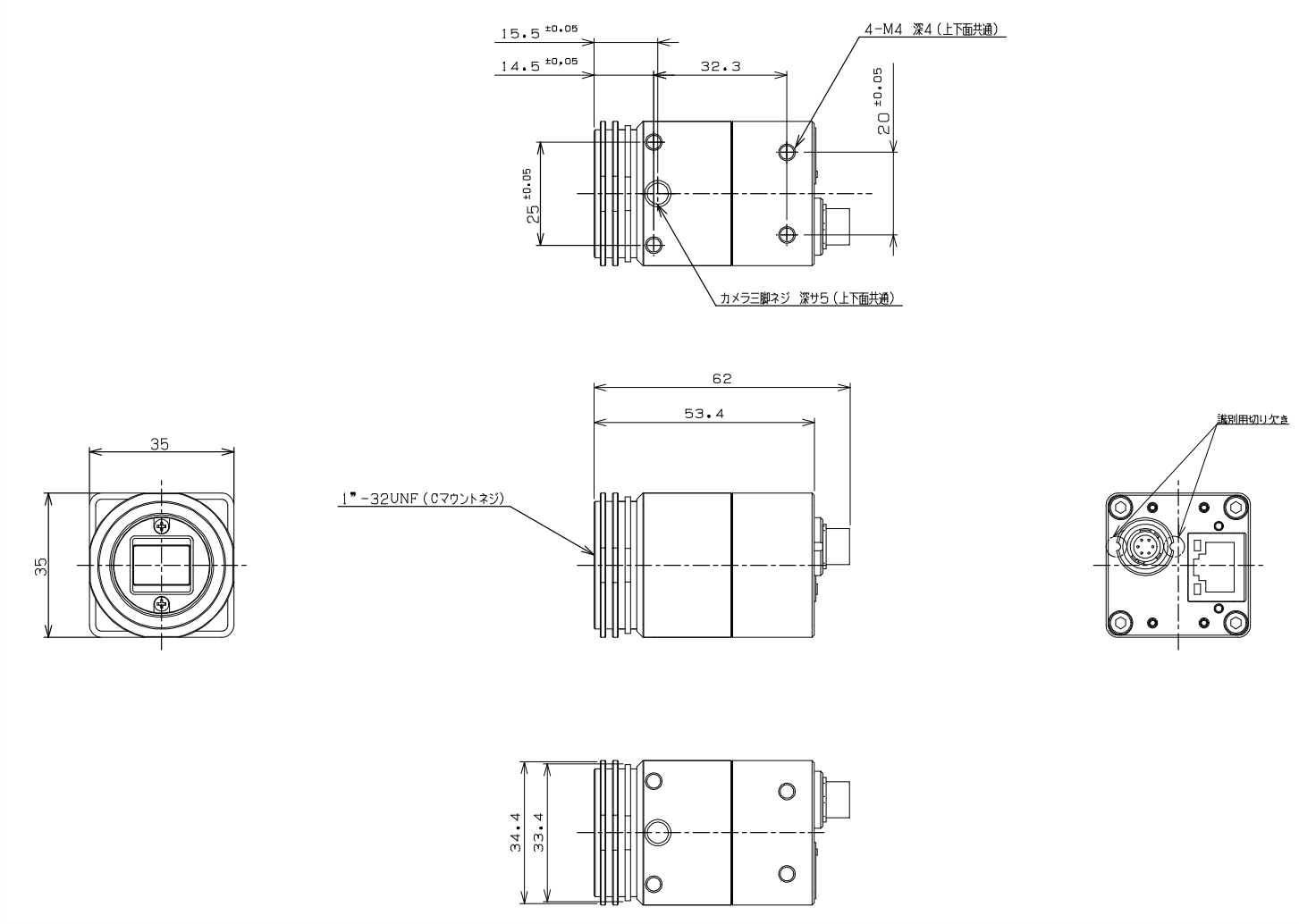

Unit: mm

Figure 4: Mechanical Dimensions (Monochrome)

Phone +66 87 803 1661 | www.imRNasia.com | sale@imRNasia.com

4.2 STC-SCS312POE / STC-SCS500POE

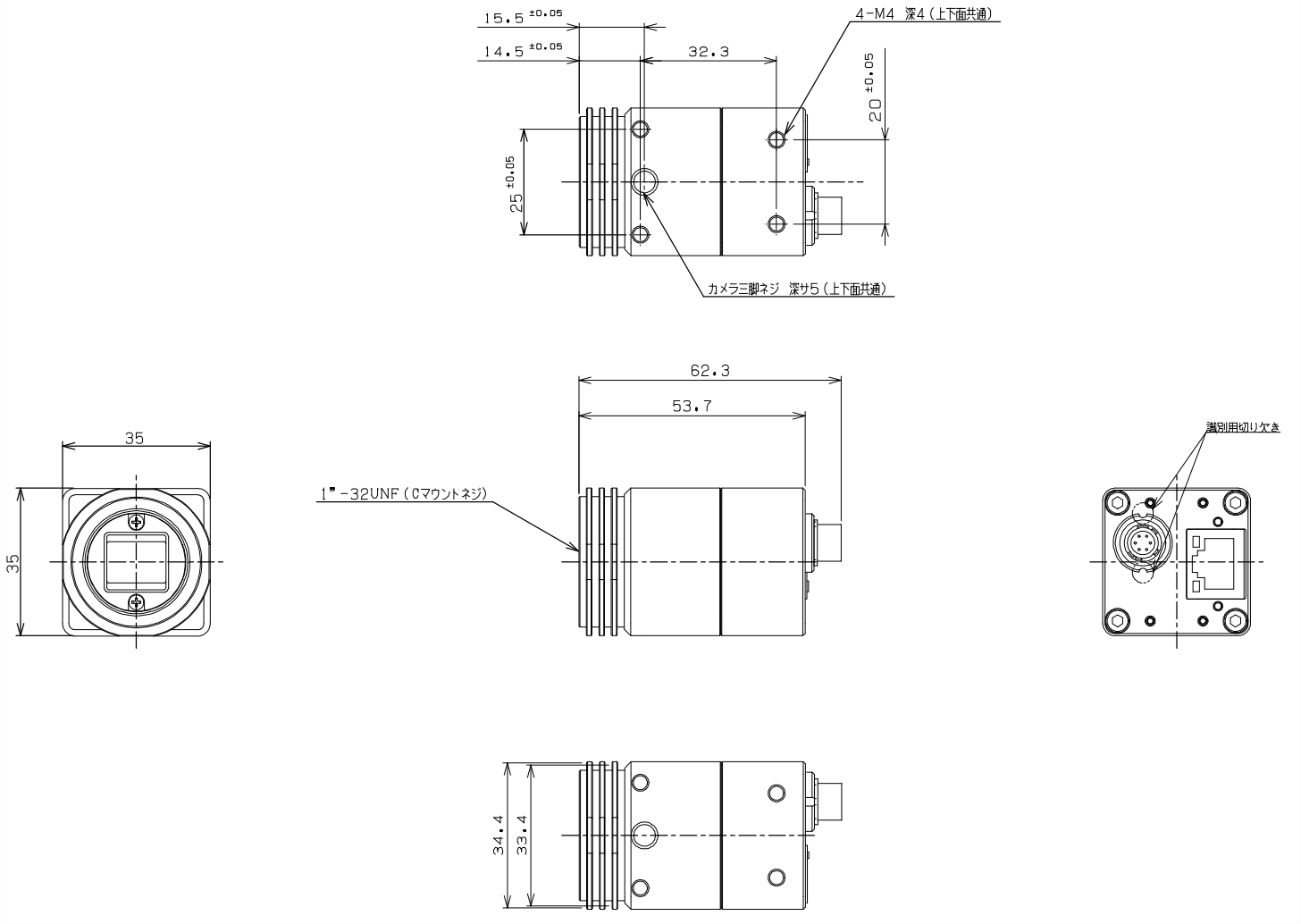

Unit: mm

Figure 5: Mechanical Dimensions (Color)

Phone +66 87 803 1661 | www.imRNasia.com | sale@imRNasia.com

5 Sensor information

5.1 Pixel Transferring Image

STC-SBS312POE / STC-SBS500POE (Monochrome)

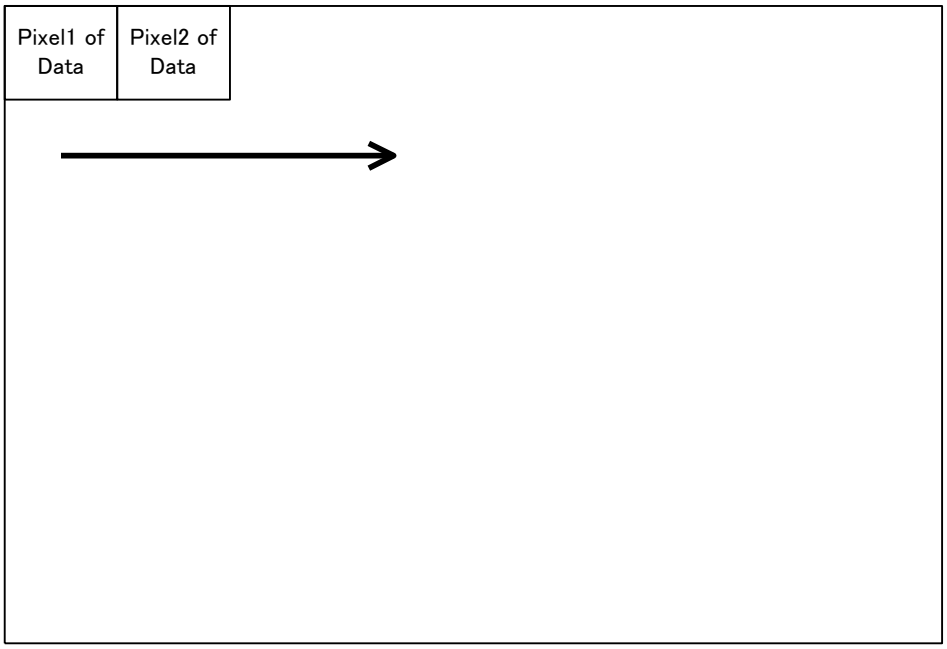

Pixel (n) of Data: nth pixel being transferred

STC-SCS312POE / STC-SCS500POE (Color)

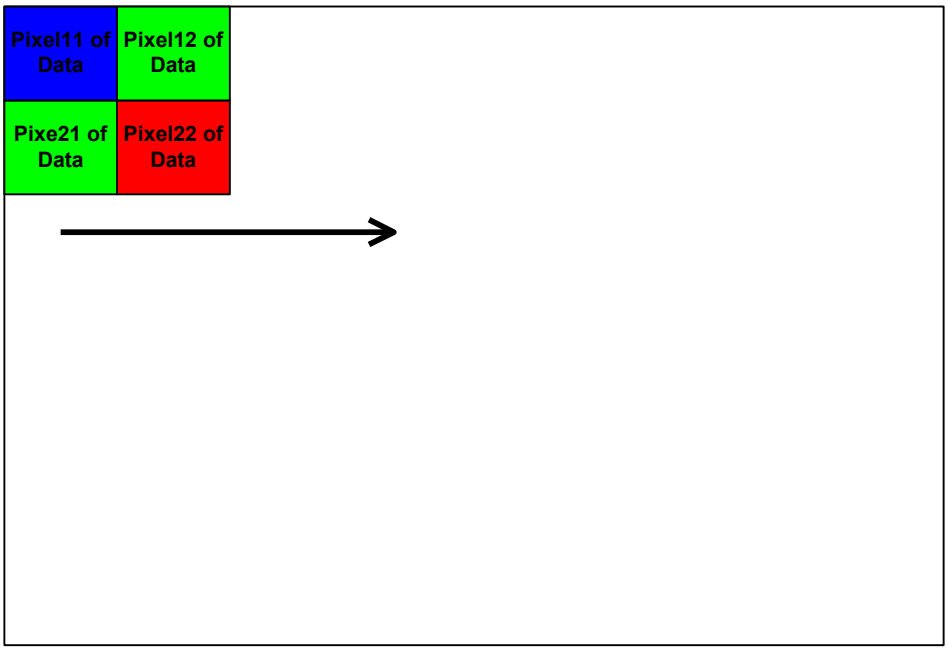

Pixel (m,n) of Data: nth pixel of the mth line being transferred

6 Camera Operational Modes

6.1 Normal Mode

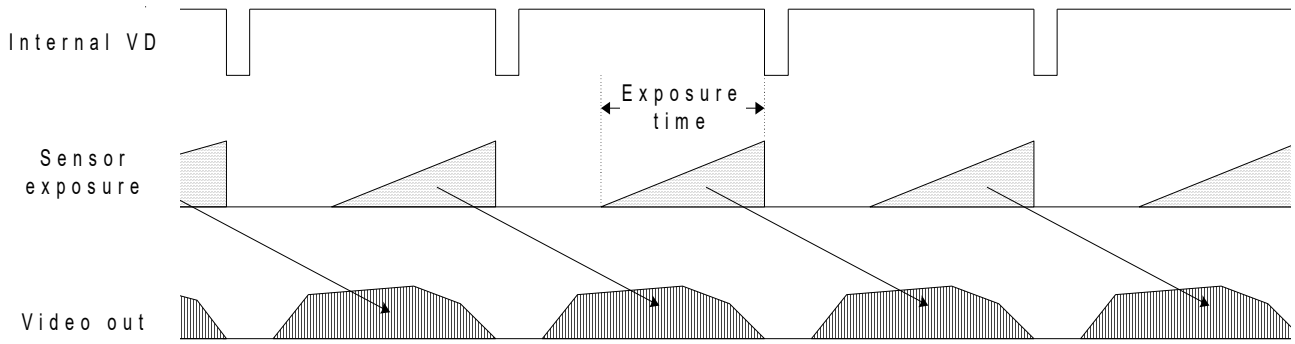

6.2 Pulse width trigger mode

In trigger mode with positive polarity, the camera exposure starts at the rising edge of the trigger pulse and stops at the falling edge of the trigger pulse. Therefore, if positive polarity exposure is selected, the exposure periods are the high states of the trigger pulse.

6.2.1 Timing

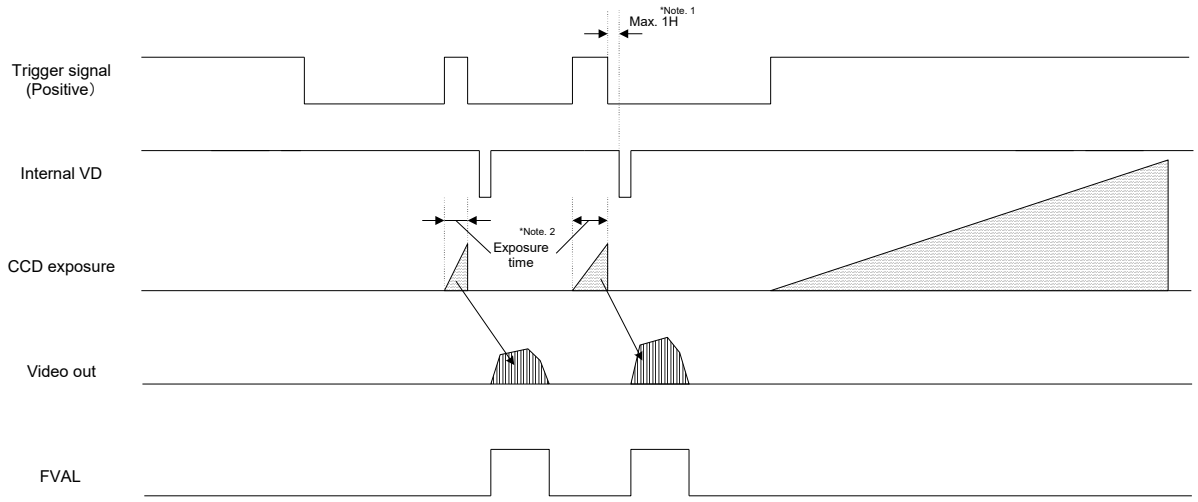

Note 1: The video output is going to be V reset by the next internal HD signal immediately after the exposure is finished. The exposure time is set by the pulse width of the trigger signal.

Note 2: The FVAL signal does not output when the exposure by the trigger signal does not exist.

Phone +66 87 803 1661 | www.imRNasia.com | sale@imRNasia.com

6.2.2 Exposure Timing with the Positive Polarity Trigger Signal

STC-SBS/SCS 312POE: 8bit: 1H = 13.333333us 10bit,12bit: 1H = 17.777778us

STC-SBS/SCS 500POE: 8bit: 1H = 15.757576us 10bit,12bit: 1H = 21.010101us

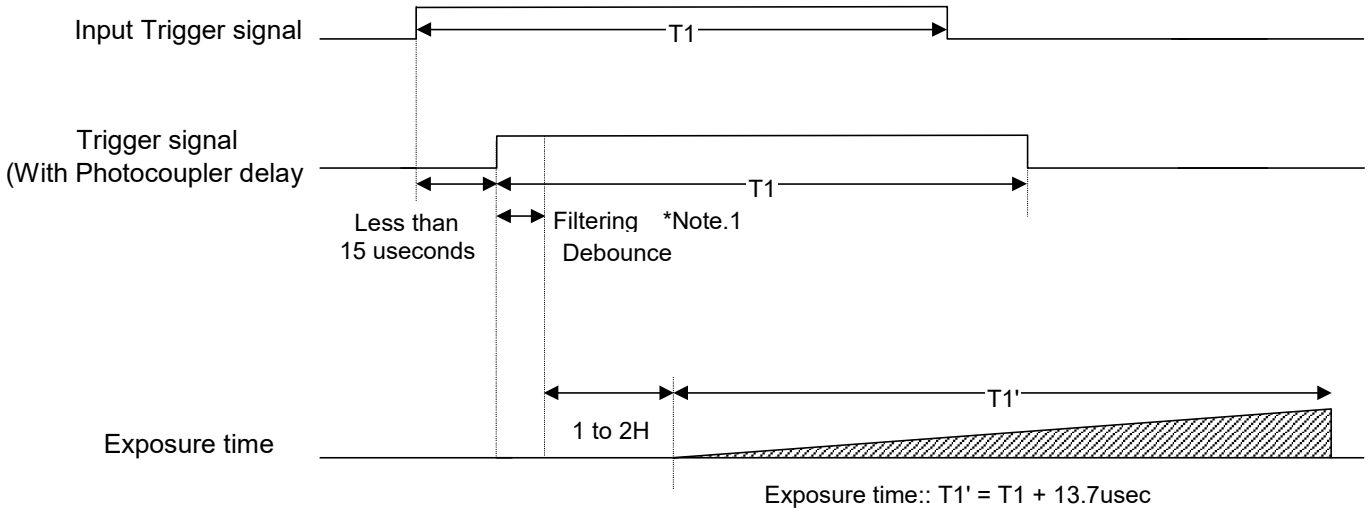

Note 1: The trigger signal will be removed by the filtering if the active pulse width of the input trigger signal is less than "LineDebounceTime" setting time. Please input more than "LineDebounceTime" time active pulse width of the trigger signal.

Note 2: The exposure will start "LineDebounceTime + photocoupler delay" time after the rising edge of the input trigger signal.

6.2.3 Exposure Timing with the Negative Polarity Trigger Signal

STC-SBS/SCS 312POE: 8bit: 1H = 13.333333us 10bit,12bit: 1H = 17.777778us

STC-SBS/SCS 500POE: 8bit: 1H = 15.757576us 10bit,12bit: 1H = 21.010101us

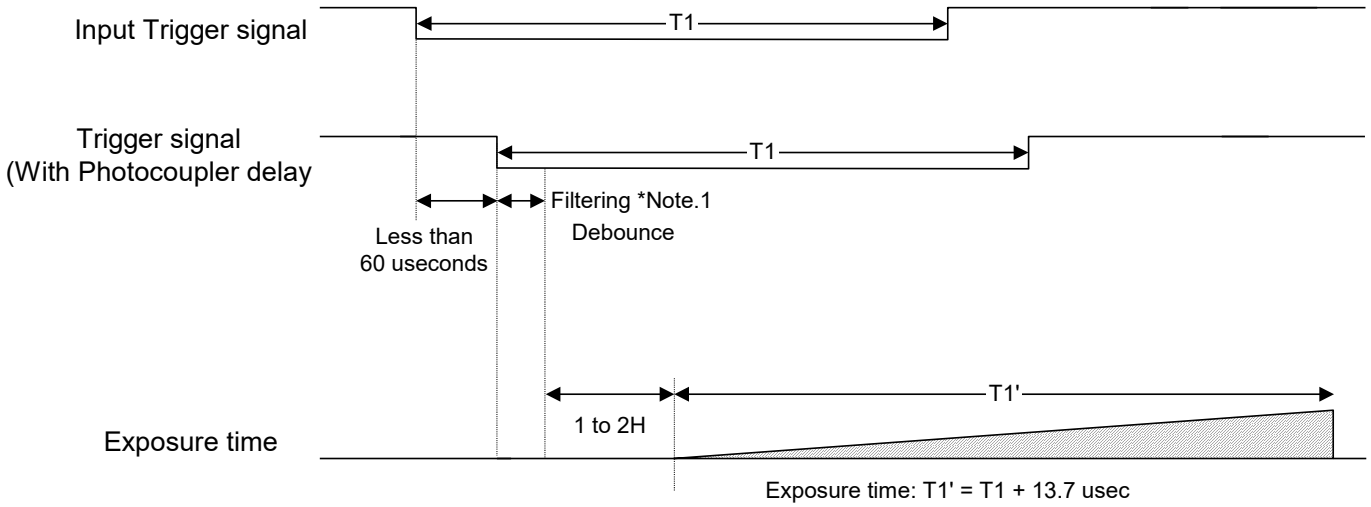

Note 1: The trigger signal will be removed by the filtering if the active pulse width of the input trigger signal is less than "LineDebounceTime" setting time. Please input more than "LineDebounceTime" time active pulse width of the

trigger signal.

Note 2: The exposure will start “LineDebounceTime + photocoupler delay” time after the falling edge of the input trigger signal.

6.3 Edge Preset Trigger Mode

In “edge preset trigger mode”, the camera exposure starts at the rising edge of the trigger signal like the “pulse width trigger mode” in the previous sections. However, in this mode, the exposure duration time is based on the preset value stored by the by the camera setting communication.

6.3.1 Timing

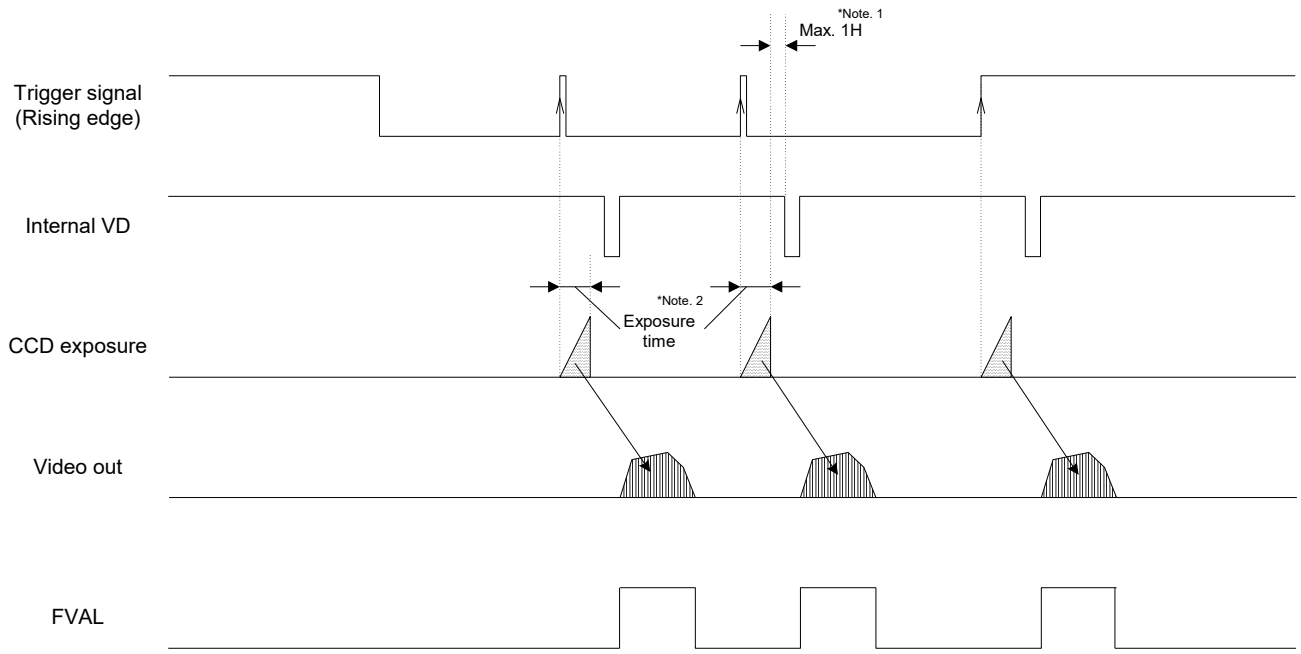

Note 1: The video output will be V reset by the next internal HD signal immediately after the exposure is finished.

Note 2: The exposure time is set by the preset electronic shutter speed.

Phone +66 87 803 1661 | www.imRNasia.com | sale@imRNasia.com

6.3.2 Exposure Timing with the Positive Polarity Trigger Signal

STC-SBS/SCS 312POE: 8bit: 1H = 13.333333us 10bit,12bit: 1H = 17.777778us
STC-SBS/SCS 500POE: 8bit: 1H = 15.757576us 10bit,12bit: 1H = 21.010101us

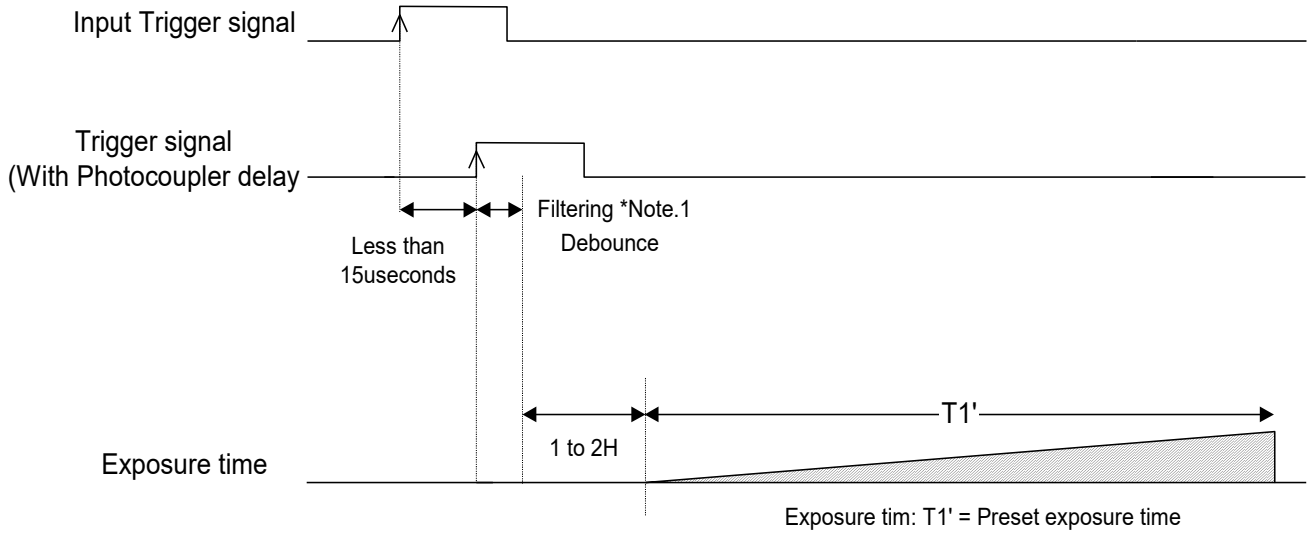

Note 1: The trigger signal will be removed by the filtering if the active pulse width of the input trigger signal is less than "LineDebounceTime" setting time. Please input more than "LineDebounceTime" time active pulse width of the trigger signal.

Note 2: The exposure will start "LineDebounceTime + photocoupler delay" time after the rising edge of the input trigger signal.

6.3.3 Exposure Timing with the Negative Polarity Trigger signal

STC-SBS/SCS 312POE: 8bit: 1H = 13.333333us 10bit,12bit: 1H = 17.777778us
STCC-SBS/SCS 500POE: 8bit: 1H = 15.757576us 10bit,12bit: 1H = 21.010101us

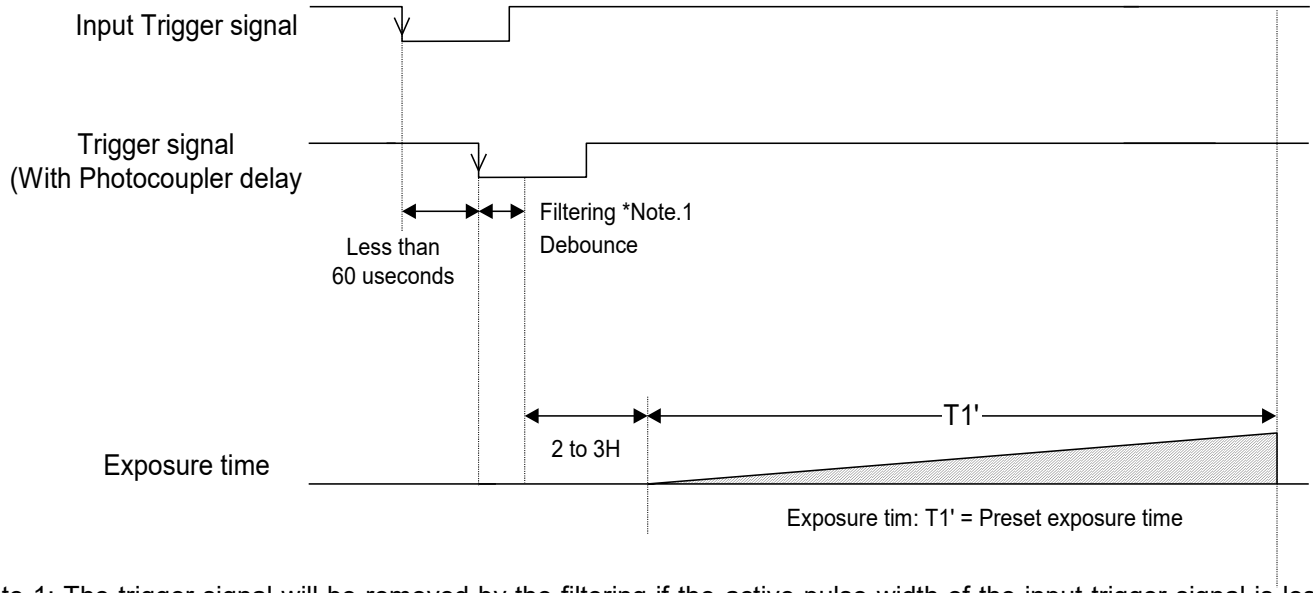

Note 1: The trigger signal will be removed by the filtering if the active pulse width of the input trigger signal is less than "LineDebounceTime" setting time. Please input more than "LineDebounceTime" time active pulse width of the trigger signal.

Note 2: The exposure will start "LineDebounceTime + photocoupler delay" time after the falling edge of the input trigger signal.

6.4 Edge Preset Trigger Mode (Trigger Input While the Image Is Out)

In this trigger mode, the camera exposure starts at the rising edge of the trigger pulse.
If trigger signal input is required while the image is out, then it is necessary to disable the trigger signal mask with the communication.
To avoid generating additional noise on the image, it is necessary to set the “H reset” at the exposure start mode.

6.4.1 Timing

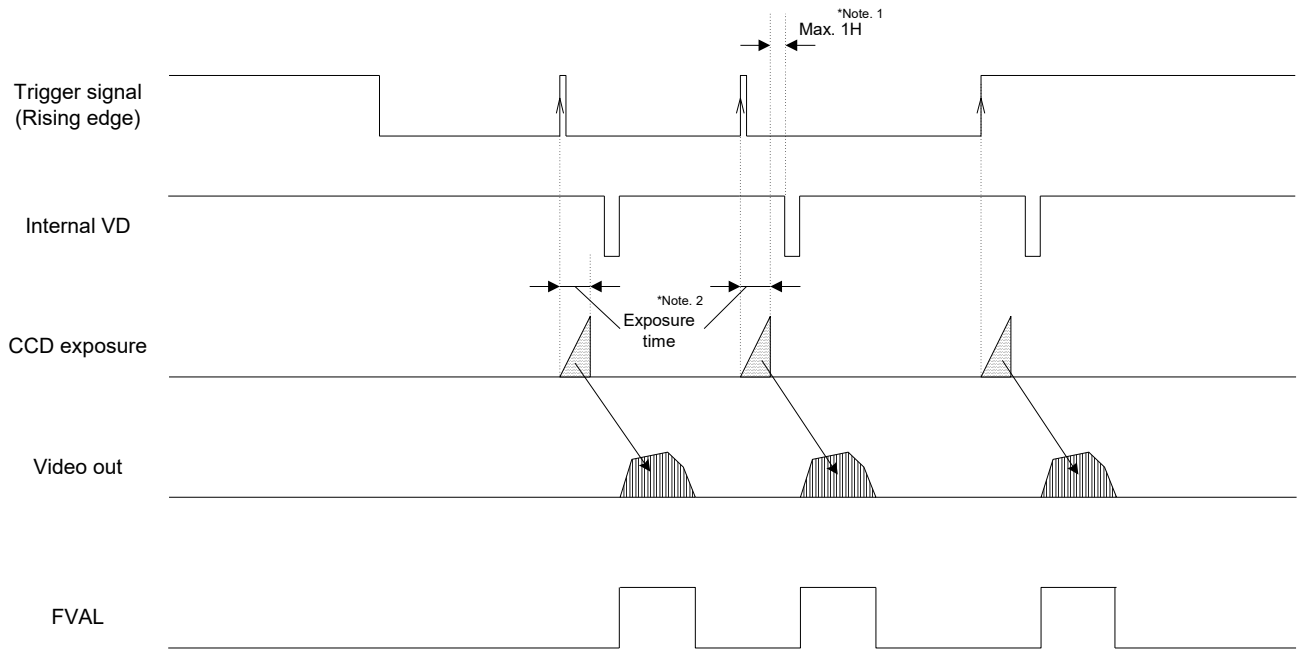

Note 1: The video output will be V reset by the next internal HD signal immediately after the exposure is finished.
Note 2: The exposure time is set by the preset electronic shutter speed.

Phone +66 87 803 1661 | www.imRNasia.com | sale@imRNasia.com

7 Camera Operation

7.1 GenICam command list

GenICam command	Function
Width	Width for ROI (pixel)
Height	Height for ROI (pixel)
PixelFormat	Video out (bit)
OffsetX	X offset for ROI (pixel)
OffsetY	Y offset for ROI (pixel)
ReverseX	Horizontal flip image
ReverseY	Vertical flip image
TestImageSelector	Test pattern selection
ExposureMode	Trigger mode
ExposureTimeRaw/ ExposureTimed/ ExposureAbs	Exposure time (us) of the electronic shutter
ExposureAuto	Shutter mode
AcquistionFrameRate	Frame rate
TriggerDelay	The delay time (us) for the trigger signal
TriggerActivation	Trigger polarity
TriggerSelector	Trigger type
TriggerSource	Trigger signal type
TriggerSoftware	Generate command software trigger
TriggerMode	Operating mode
LineDebounceTime	Debounce time (us)
LineSource0	Output signal for 2 pin of the power-I/O connector
LineSource1	Output signal for 3 pin of the power-I/O connector
UserOutputValue0	UserOutput signal for 2 pin of the power-I/O connector
UserOutputValue1	UserOutput signal for 3 pin of the power-I/O connector
LineInverter0	Output signal polarity for 2 pin of the power-I/O connector
LineInverter1	Output signal polarity for 3 pin of the power-I/O connector
StrobeSignalOnTime	Strobe signal active time (us)

GenICam command	Function
StrobeSignalDelay	The delay time (us) for the strobe signal
BalanceRatioSelector	R,G or B gain selection
BalanceRatio	R,G or B gain
BalanceWhiteAuto	White balance mode
BalanceRatio_R_Preset1	Preset1 white balance (Red gain)
BalanceRatio_Gr_Preset1	Preset1 white balance (Gr gain)
BalanceRatio_B_Preset1	Preset1 white balance (Blue gain)
BalanceRatio_Gb_Preset1	Preset1 white balance (Gb gain)
BalanceRatio_R_Preset2	Preset2 white balance (Red gain)
BalanceRatio_Gr_Preset2	Preset2 white balance (Gr gain)
BalanceRatio_B_Preset2	Preset2 white balance (Blue gain)
BalanceRatio_Gb_Preset2	Preset2 white balance (Gb gain)
BalanceRatio_R_Preset3	Preset3 white balance (Red gain)
BalanceRatio_Gr_Preset3	Preset3 white balance (Gr gain)
BalanceRatio_B_Preset3	Preset3 white balance (Blue gain)
BalanceRatio_Gb_Preset3	Preset3 white balance (Gb gain)
BalanceRatio_R_Once	Push to set white balance (Red gain)
BalanceRatio_Gr_Once	Push to set white balance (Gr gain)
BalanceRatio_B_Once	Push to set white balance (Blue gain)
BalanceRatio_Gb_Once	Push to set white balance (Gb gain)
GainAuto	AGC
Gain GainRaw GainAbs	Analog gain
BlackLevel BlackLevelRaw BlackLevelABS	Black Level
GammaEnable	Gamma table ON/OFF
ReloadGammaData	Gamma table load ON/OFF
Min_ShutterTime	The lower limit of the electronic shutter for auto shutter (us)
Max_ShutterTime	The upper limit of the electronic shutter for auto shutter (us)
AGCRange	AGC maximum limit

Phone +66 87 803 1661 | www.imRNasia.com | sale@imRNasia.com

GenICam command	Function
DigitalGain	Digital gain
ALCWeight1	Weight1 for ALC
ALCWeight2	Weight2 for ALC
ALCWeight3	Weight3 for ALC
ALCWeight4	Weight4 for ALC
ALCWeight5	Weight5 for ALC
ALCWeight6	Weight6 for ALC
ALCWeight7	Weight7 for ALC
ALCWeight8	Weight8 for ALC
ALCWeight9	Weight9 for ALC
ALCWindowV1	Vertical1 position for the ALC weight area (pixel)
ALCWindowV2	Vertical2 position for the ALC weight area (pixel)
ALCWindowV3	Vertical3 position for the ALC weight area (pixel)
ALCWindowV4	Vertical4 position for the ALC weight area (pixel)
ALCWindowH1	Horizontal1 position for the ALC weight area (pixel)
ALCWindowH2	Horizontal2 position for the ALC weight area (pixel)
ALCWindowH3	Horizontal3 position for the ALC weight area (pixel)
ALCWindowH4	Horizontal4 position for the ALC weight area (pixel)
WB_WindowH1	Vertical1 position for the white balance area
WB_WindowH2	Vertical2 position for the white balance area
WB_WindowV1	Horizontal1 position for the white balance area
WB_WindowV2	Horizontal2 position for the white balance area
WB_WindowMode	White balance area ON/OFF
YThreshold	Bright level threshold for auto white balance
DeviceID	Serial number
DeviceTemperature	Inside of camera temperature

7.2 Save and load the camera setting data

The camera has the camera setting including the factory default, load function.
The camera has the two camera settings outlined below:

Default: The factory default data (This data cannot change)
UserSet1: Changeable data

These camera settings load to the register in the RAM on the camera.
The camera settings saving and loading is controllable with “UserSetSelector” and “UserSetDefaultSelector” parameters, and “UserSetLoad” and “UserSetSave” commands in UserSetControl category of GenICam.

The details of the parameters and the functions are in the table below:

GenICam parameters

UserSetSelector	Enumeration type	Select “Default” or ”UserSet1” UserSetLoad or UserSetSave process for the selected data.
UserSetDefaultSelector	Enumeration type	Select which settings (“Default or UserSet1”) load automatically when the camera power is on. Selection saves automatically.
UserSetLoad	Command type	The camera settings load from ROM to the register in RAM.
UserSetSave	Command type	The camera settings at the register in RAM save to ROM.

7.2.1 The camera settings saving

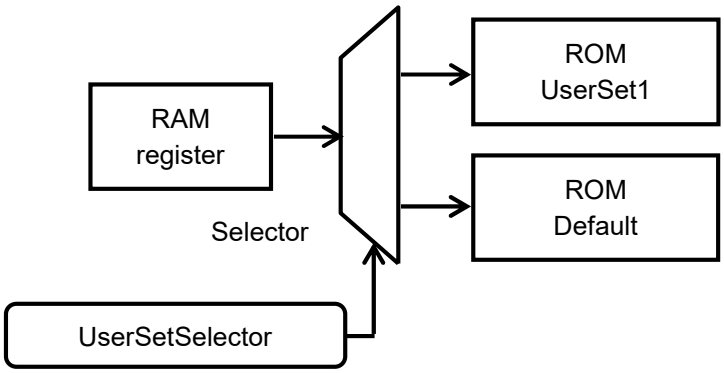

When UserSetSave is executing, the camera settings in the register at RAM, save to ROM that is selected at UserSetSelector
Caution:
UserSetSave command is only available when “UserSet1” is selected at UserSetSelector

The camera settings saving procedure

1. Selects “UserSet1” at UserSetSelector.
2. Executes UserSetSave.

7.2.2 The camera settings loading

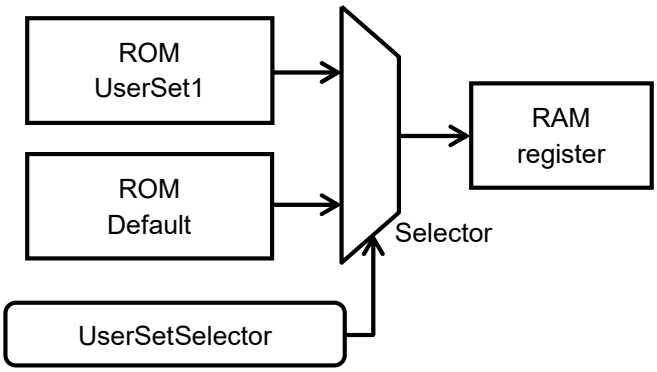

When UserSetLoad is executing,
the camera settings load from the
selected ROM to the register at RAM.

The camera settings loading procedure

1. Selects “UserSet1” or “Default” at UserSetSelector.
2. Executes UserSetLoad.

7.2.3 The camera settings loaded when the camera is powered on.

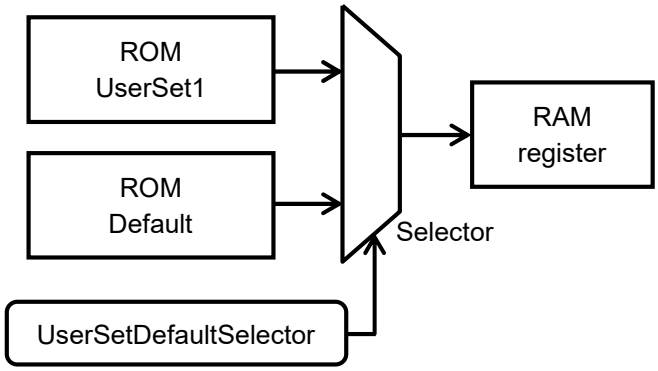

When the camera power is on,
the camera settings load from the
selected ROM to the register at RAM.

The camera settings loading setting for the camera power is on

1. Selects “UserSet1” or “Default” at UserSetDefaultSelector.

7.2.4 The camera settings initialization

Please follow the below procedure for the camera settings put back to the factory default.
The settings of UserSet1 are overwrite with the settings of “Default”.

The camera settings initialization procedure

1. Selects “Default” at UserSetSelector.
2. Executes UserSetLoad.
3. Selects “UserSet1” at UserSetSelector.
4. Executes UserSetSave.

7.3 Gain

Analog gain and digital gain are available for the gain control.

7.3.1 Analog gain

This parameter sets the analog gain.

GenICam parameter

Gain	Float type	Analog gain. Range: 0 to 208, Default: 0

Analog gain formula
Gain (dB) ＝ Gain / 10

7.3.2 Digital gain

This parameter sets the digital gain.

GenICam parameter

DigitalGain	Integer type	Digital gain. Range: 0 to 255, Default: 0

Digital gain formula
Gain (xtimes) = 1 + (DigitalGain / 128)

7.4 Black level

This parameter sets the black level (the clamp level for the black signal).
The bottom of the signal is clamped at this setting level. The signal does not become below this level.

GenICam parameter

BlackLevel	Float type	Black level. Range: 0 to 63, Default: 31

Black level formula
At 12bits output: Black level (grayscale) ＝ BlackLeve * 4
At 10bits output: Black level (grayscale) ＝ BlackLevel
At 8bits output: Black level (grayscale) ＝ BlackLevel / 4

Phone +66 87 803 1661 | www.imRNasia.com | sale@imRNasia.com

7.5 ALC (Auto Light Control)

ALC function has two control methods, which is AGC (Auto Gain Control) and the auto shutter. The AGC and the auto shutter sets up individually.
The camera parameters are adjusted to the brightness of the image is maintained with the target brightness automatically with the ALC function.

GenICam parameters (for AGC and auto shutter)

<table>
<tr><td>TargetBrightness</td><td>Integer type</td><td>Target brightness. Range: 0 to 255, Default: 128</td></tr>
<tr><td>ACL_Peak_Average</td><td>Integer type</td><td>Importance ratio for the brightness peak at ALC control.
Range: 0 to 255, Default: 0</td></tr>
<tr><td>ALCWeight1
ALCWeight2
ALCWeight3
ALCWeight4
ALCWeight5
ALCWeight6
ALCWeight7
ALCWeight8
ALCWeight9</td><td>Integer type</td><td>Weight.
Range: 0 to 15, Default: 1 * Set 10 on ALCWeight5 only
Sets the weight for each weight area.</td></tr>
<tr><td>ALCWindowV1
ALCWindowV2
ALCWindowV3
ALCWindowV4</td><td>Integer type</td><td>Vertical positions for the frame of the weight area.
<table>
<tr><td></td><td>3M</td><td>5M</td></tr>
<tr><td>Range</td><td>0 to 1535</td><td>0 to 2047</td></tr>
<tr><td>Default</td><td>V1(32), V2(544),
V3(992), V4(1504)</td><td>V1(32), V2(714),
V3(1334), V4(2016)</td></tr>
</table></td></tr>
<tr><td>ALCWindowH1
ALCWindowH2
ALCWindowH3
ALCWindowH4</td><td>Integer type</td><td>Horizontal positions for the frame of the weight area.
<table>
<tr><td></td><td>3M</td><td>5M</td></tr>
<tr><td>Range</td><td>0 to 2047</td><td>0 to 2447</td></tr>
<tr><td>Default</td><td>V1(36), V2(718),
V3(1330), V4(2012)</td><td>V1(36), V2(852),
V3(1596), V4(2412)</td></tr>
</table></td></tr>
</table>

<u>Target brightness (TargetBrightness) formula</u>
At 12bits output: Target brightness (grayscale) ＝ TargetBrightness * 16
At 10bits output: Target brightness (grayscale) ＝ TargetBrightness * 4
At 8bits output: Target brightness (grayscale) ＝ TargetBrightness

<u>About the importance ratio for the brightens peak at ALC control (ACL_Peak_Average)</u>
When 0 sets, Average: 100%, Peak: 0%. The ALC control with the brightness average.
When 255 sets, Average: 0%, Peak: 100%. The ALC control with the brightness peak.
When 128 sets, Average: 50%, Peak: 50%.

7.5.1 ALC control method

The ALC control within the weight area of 1 to 9.
The weight area setting parameters are shown below:

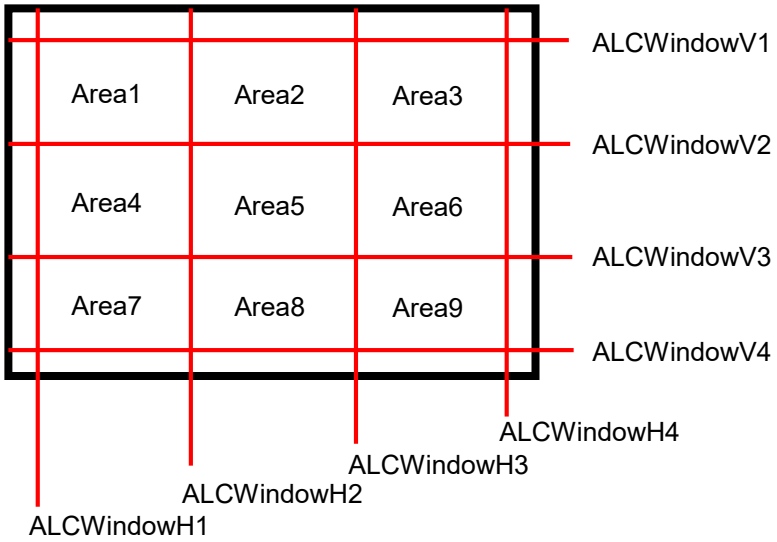

The brightness average and peak calculate for each weight area.
The target brightness comparison value calculates with “ALC_Peak_Average”, the brightness average and peak then compare with the target brightness to define the necessary brightness control (to dark or to bright).
The brightness of the image maintains to the “TargetBrightness” with the AGC and the auto shutter functions.

If AGC and the auto shutter are ON for the ALC control, the auto shutter function maintains the brightness first. The AGC function maintains the brightness if the brightness cannot maintain to the TargetBrightness with the auto shutter.

7.5.2 AGC (Auto Gain Contorl)

The brightness of the image maintains to the target brightness with the gain automatically.
If the brightness of the image is the darker than the target brightness, the gain increases up to AGCRange.
If the brightness of the image is the brighter than the target brightness, the gain decreases.

GenICam parameters

GainAuto	Enumeration type	AGC ON/OFF selection Selection: ON (Continuous) or OFF (Off). Default: OFF
AGCRange	Integer type	Maximum gain. Range: 0 to 208, Default: 208 This is the maximum gain for AGC.

Phone +66 87 803 1661 | www.imRNasia.com | sale@imRNasia.com

7.5.3 Auto shutter

The brightness of the image maintains to the target brightness with the shutter automatically.
If the brightness of the image is the darker than the target brightness, the exposure time extends up to Max_ShutterTime.
If the brightness of the image is the brighter than the target brightness, the exposure time becomes shorter up to Min_ShutterTime.

GenICam parameters

ExposureAuto	Enumeration type	Auto shutter ON/OFF selection ON (Continuous), OFF (Off). Default: OFF
Min_ShutterTime	Integer type	Minimum exposure time (usecond).
Max_ShutterTime	Integer type	Maximum exposure time (usecond).

	3M	5M
Range	28 to 16777215(8bit) 32 to 16777215(10bit,12bit)	30 to 16777215(8bit) 35 to 16777215(10bit,12bit)
Default	28	30

	3M	5M
Range	28 to 16777215(8bit) 32 to 16777215(10bit,12bit)	30 to 16777215(8bit) 35 to 16777215(10bit,12bit)
Default	296,130	471,270

7.5.4 ALC settings procedure

ALC settings procedure

1. Sets ALCWeight1 to 9.
2. Sets ALCWindowV1 to 4.
3. Sets ALCWindowH1 to 4.
4. Sets TargetBrightness.
5. Sets ACL_Peak_Average.
6. Sets AGCRange if AGC is using.
7. Sets Min_ShutterTime, if the auto shutter is using.
8. Sets Max_ShutterTime, if the auto shutter is using.
9. Sets “Continuous” at GainAuto, if AGC is using.
10. Sets “Continuous” at ExposureAuto, if the auto shutter is using.

7.6 White balance (Only available for the color cameras)

The color compensates with the gain adjustment each color.
The gain for each color has to adjust with the flat white target to the each color has the same brightness.
The white balance control methods are the listed in the below:

OFF
Auto white balance
Push to set white balance
Preset1 to 3

7.6.1 White balance control methods

GenICam parameters

BalanceWhiteAuto	Enumeration type	White balance control method selection. Default: off
BalanceRatioSelector	Enumeration type	White balance control target color selection.
BalanceRatio	Float type	Color gain setting for the color selects at BalanceRatioSelector
YThreshold	Integer type	The brightness threshold to use the pixel for the auto white balance control. Default: 0,Range: 0 to 4095
BalanceRatio_R_Once	Integer type	R white balance gain for OFF and push to set white balance. Default: 0
BalanceRatio_Gr_Once	Integer type	GR white balance gain for OFF and push to set white balance. Default: 0
BalanceRatio_B_Once	Integer type	R white balance gain for OFF and push to set white balance. Default: 0
BalanceRatio_Gb_Once	Integer type	Gb white balance gain for OFF and push to set white balance. Default: 0
BalanceRatio_R_Preset1	Integer type	R white balance gain for preset1. Default: 0
BalanceRatio_Gr_Preset1	Integer type	Gr white balance gain for preset1. Default: 0
BalanceRatio_B_Preset1	Integer type	B white balance gain for preset1. Default: 0
BalanceRatio_Gb_Preset1	Integer type	Gb white balance gain for preset1. Default: 0
BalanceRatio_R_Preset2	Integer type	R white balance gain for preset2. Default: 0
BalanceRatio_Gr_Preset2	Integer type	Gr white balance gain for preset2. Default: 0
BalanceRatio_B_Preset2	Integer type	B white balance gain for preset2. Default: 0
BalanceRatio_Gb_Preset2	Integer type	Gr white balance gain for preset2. Default: 0
BalanceRatio_R_Preset3	Integer type	R white balance gain for preset3. Default: 0
BalanceRatio_Gr_Preset3	Integer type	Gr white balance gain for preset3. Default: 0
BalanceRatio_B_Preset3	Integer type	B white balance gain for preset3. Default: 0
BalanceRatio_Gb_Preset3	Integer type	Gb white balance gain for preset3. Default: 0

7.6.2 OFF

The white balance with BalanceRatio_X_Once (X: R, Gr, B or Gb)
If the white balance process is not necessary, please sets 0 for BalanceRatio_X_Once (X: R, Gr, B or Gb)

<u>White balance “OFF” setting procedure</u>

1. Sets Off at BalanceWhiteAuto.

7.6.3 Auto white balance

The optimized white balance gain calculates each frame for the auto white balance.

Auto white balance setting procedure

1. Sets Continuous at BalanceWhiteAuto.

7.6.4 Push to set white balance

The white balance gain adjusts once after select this white balance then set to Balance_X_Once (X: R, Gr, B or Gb)
Sets OFF at BalanceWhiteAuto automatically after set Balance_X_Once.

Push to set white balance setting procedure

1. Sets the flat white target.
2. Sets Once at BalanceWhiteAuto.

7.6.5 Preset white balance1 to 3

The camera has three preset manual white balance.

Presets saving area

Preset1: BalanceRatio_R_Preset1, BalanceRatio_Gr_ Preset1,
BalanceRatio_B_Preset1, BalanceRatio_Gb_ Preset1
Preset2: BalanceRatio_R_Preset2, BalanceRatio_Gr_ Preset2,
BalanceRatio_B_Preset2, BalanceRatio_Gb_ Preset2
Preset3: BalanceRatio_R_Preset3, BalanceRatio_Gr_ Preset3,
BalanceRatio_B_Preset3, BalanceRatio_Gb_ Preset3

Preset white balance setting procedure

1. Sets the white balance gain for the preset1, 2 or 3. (X: 1 to 3)
(BalanceRatio_R_PresetX, BalanceRatio_Gr_PresetX, BalanceRatio_B_PresetX, BalanceRatio_Gb_PresetX)
2. Sets PresetX (X: 1 to 3) at BalanceWhiteAuto.

Phone +66 87 803 1661 | www.imRNasia.com | sale@imRNasia.com

7.6.6 White balance calculate area setting

The white balance gain calculation area is changeable.

GenICam parameters

<table>
<tr><td>WB_WindowMode</td><td>Enumeration type</td><td>White balance gain calculation area selection
Full screen (Off), Specified area (On). Default: Full screen</td></tr>
<tr><td>WB_WindowV1
WB_WindowV2</td><td>Integer type</td><td>Vertical frame position for the specified area.
<table>
<tr><td></td><td>3M</td><td>5M</td></tr>
<tr><td>Range</td><td>0 to 1535</td><td>0 to 2047</td></tr>
<tr><td>Default</td><td>V1(0), V2(1535)</td><td>V1(0), V2(2047)</td></tr>
</table></td></tr>
<tr><td>WB_WindowH1
WB_WindowH2</td><td>Integer type</td><td>Horizontal frame position for the specified area.
<table>
<tr><td></td><td>3M</td><td>5M</td></tr>
<tr><td>Range</td><td>0 to 2047</td><td>0 to 2447</td></tr>
<tr><td>Default</td><td>H1(0), H2(2047)</td><td>H1(0), H2(2447)</td></tr>
</table></td></tr>
</table>

<u>The brightness threshold for the white balance gain calculate pixel (YThreshold)</u>
Threshold (grayscale) ＝ YThreshold
12bits process in the camera.

The white balance calculation area settings are below:

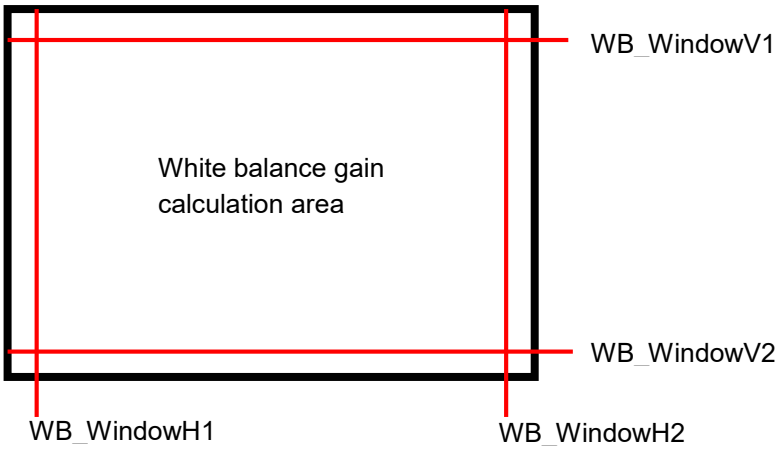

Phone +66 87 803 1661 | www.imRNasia.com | sale@imRNasia.com

7.7 Gamma correction

The gamma correction is the gamma = 1.0 or the gamma table control.

GenICam parameters

GammaMode	Enumeration type	Gamma correction selection Gamma=1.0 (Off), Gamm table control (On). Default: Gamma=1.0
ReloadGammaData	Command type	Gamma table loading from ROM to RAM

Gamma table loading procedure (ReloadGammaData)

1. Executes ReloadGammaData.

7.7.1 Gamma table writing

It is necessary to use the virtual com port communication (eBUS SDK: PvSerialPort class) to write the gamma table to the camera. The gamma table cannot write the camera with GenICam parameter.
Please refer the other document for the details of the gamma table writing.

Phone +66 87 803 1661 | www.imRNasia.com | sale@imRNasia.com

7.8 ROI (Region of Interest)

The specified area of the image can output from the camera with ROI function.
The frame rate is increased when the height is reduced.
The frame rate does not increase when the width is reduced.

GenICam paramters

<table>
<tr><td>Width</td><td>Integer type</td><td>Width of the output image (pixels)
Setting steps: 8 pixels.
<table>
<tr><td></td><td>3M</td><td>5M</td></tr>
<tr><td>Range</td><td>264 to 2048</td><td>264 to 2448</td></tr>
<tr><td>Default</td><td>2048</td><td>2448</td></tr>
</table></td></tr>
<tr><td>Height</td><td>Integer type</td><td>Height of the output image (lines)
Setting steps: 2 lines
<table>
<tr><td></td><td>3M</td><td>5M</td></tr>
<tr><td>Range</td><td>4 to 1536</td><td>4 to 2048</td></tr>
<tr><td>Default</td><td>1536</td><td>2048</td></tr>
</table></td></tr>
<tr><td>OffsetX</td><td>Integer type</td><td>Horizontal offset for the output image (pixels).
Setting steps: 8 pixels
<table>
<tr><td></td><td>3M</td><td>5M</td></tr>
<tr><td>Range</td><td>0</td><td>0</td></tr>
<tr><td>Default</td><td>0 to 2048</td><td>0 to 2448</td></tr>
</table></td></tr>
<tr><td>OffsetY</td><td>Integer type</td><td>Vertical offset for the output image (lines).
Setting steps: 2 liens
<table>
<tr><td></td><td>3M</td><td>5M</td></tr>
<tr><td>Range</td><td>0</td><td>0</td></tr>
<tr><td>Default</td><td>0 to 1536</td><td>0 to 2048</td></tr>
</table></td></tr>
</table>

The ROI area settings are below:

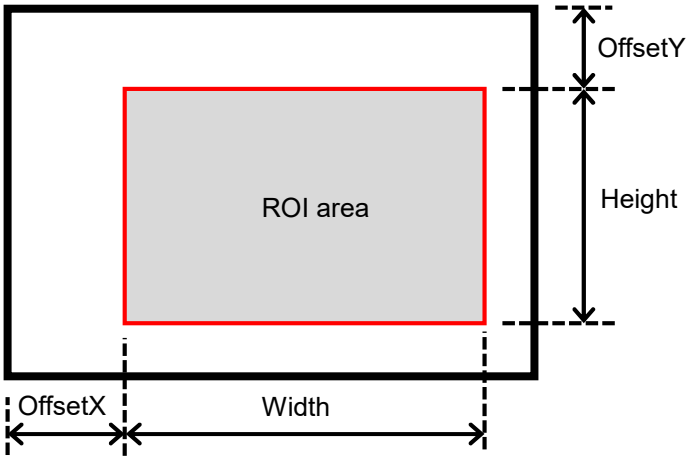

Phone +66 87 803 1661 | www.imRNasia.com | sale@imRNasia.com

7.9 Trigger

7.9.1 Trigger signal processing procedure

The camera internal process for the external hardware trigger signal or the software trigger signal input is below:

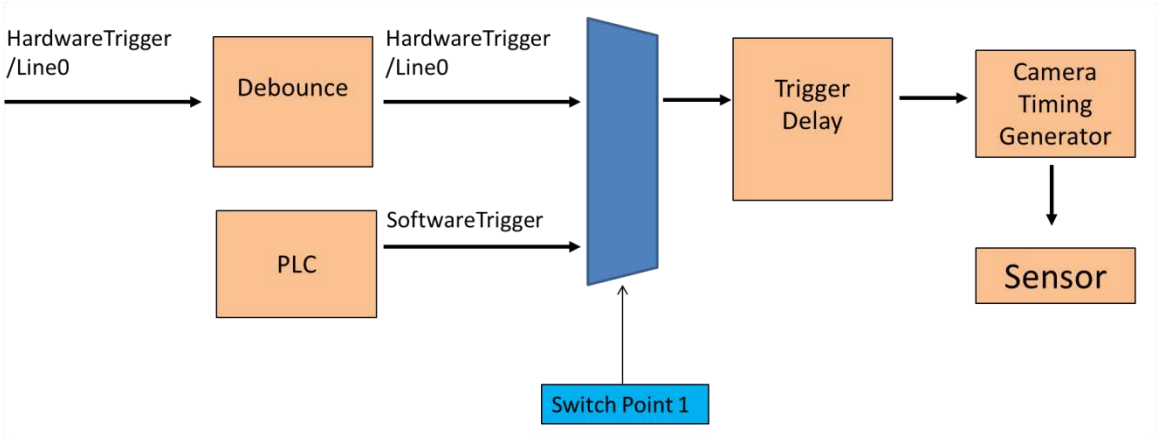

The trigger signal is selectable by the register accesses or the GenICam commands.

Switching point 1: Select the trigger signal setting for GenICam

Sets Software at TriggerSource for the software trigger signal input.

Sets Hardware at TriggerSource for the hardware =Hardware on GenICam TriggerSource=Line0 on GenICam

7.1 The camera settings (GenICam parameters) control with SDK

GenICam parameters are controllable with the eBUS SDK.
Please refer eBUS SDK API help file for the details.

7.1.1 Integer type parameter control

Integer type parameter such as “Width” control.

e.g. Width writing

```
[C++]    PvDevice.GetGenParameters()->SetIntegerValue( “Width”, 256 );
[C#】    PvDevice.GenParameters.SetIntegerValue( “Width”, 256 );
```

e.g. Width reading

```
[C++]    PvDevice.GetGenParameters()->GetIntegerValue( “Width”, &intValue );
[C#]     intValue = PvDevice.GenParameters.GetIntegerValue( “Width” );
```

7.1.2 Float type parameter control

Float type parameter such as “AcquisitionFrameRate” control.

e.g. AcquisitionFrameRate writing

```
[C++]    PvDevice.GetGenParameters()->SetFloatValue( “AcquisitionFrameRate”, 33.3 );
[C#]     PvDevice.GenParameters.SetFloatValue( “AcquisitionFrameRate”, 33.3 );
```

e.g. AcquisitionFrameRate reading

```
[C++]    PvDevice.GetGenParameters()->GetFloatValue( “AcquisitionFrameRate”, &doubleValue );
[C#]     doubleValue = PvDevice.GenParameters.GetFloatValue( “AcquisitionFrameRate” );
```

7.1.3 Enumeration type parameter control

Enumeration type parameter such as “BalanceWhiteAuto” control.

e.g. BalanceWhiteAuto writing

```
[C++]    PvDevice.GetGenParameters()->SetEnumValue( “BalanceWhiteAuto”, “Continuous” );
[C#]     PvDevice.GenParameters.SetEnumValue( “BalanceWhiteAuto”, “Continuous” );
```

e.g. BalanceWhiteAuto reading

```
[C++]    PvDevice.GetGenParameters()->GetEnumValue( “BalanceWhiteAuto”, &PvStringValue );
[C#]     stringValue = PvDevice.GenParameters.GetEnumValueAsString( “BalanceWhiteAuto” );
```

7.1.4 String type paramter control

String type parameter such as “DeviceModelName” control.

e.g. DeviceModelName writing (DeviceModelName cannot overwrite)

```
[C++]    PvDevice.GetGenParameters()->SetString( “DeviceModelName”, “STC-SB33POE” );
[C#]     PvDevice.GenParameters.SetStringValue( “DeviceModelName”, “STC-SB33POE” );
```

e.g. DeviceModelName reading

```
[C++]    PvDevice.GetGenParameters()->GetString( “DeviceModelName”, &PvStringValue );
[C#]     stringValue = PvDevice.GenParameters.GetStringValue( “DeviceModelName” );
```

7.1.5 Boolean type parameter control

Boolean type parameter such as “LineInverter0” control.

e.g. LineInverter0 writing

```
[C++]    PvDevice.GetGenParameters()->SetBooleanValue( “LineInverter0”, true );
[C#]     PvDevice.GenParameters.SetBooleanValue( “LineInverter0”, true );
```

e.g. LineInverter0 reading

```
[C++]    PvDevice.GetGenParameters()->GetBooleanValue( “LineInverter0”, &boolValue );
[C#]     boolValue = PvDevice.GenParameters. GetBooleanValue( “LineInverter0” );
```

7.1.6 Command type paramter control

Command type parameter such as “TriggerSoftware”

e.g. TriggerSoftware generating

```
[C++]    PvDevice.GetGenParameters()->ExecuteCommand( “TriggerSoftware” );
[C#]     PvDevice.GenParameters.ExexuteCommand( “TriggerSoftware” );
```

8 Revision History

Rev	Date	Changes	Note
00	2016/02/12	● New Document	

Phone +66 87 803 1661 | www.imRNasia.com | sale@imRNasia.com

Phone +66 87 803 1661 | www.imRNasia.com | sale@imRNasia.com