Machine Vision Macro Lens
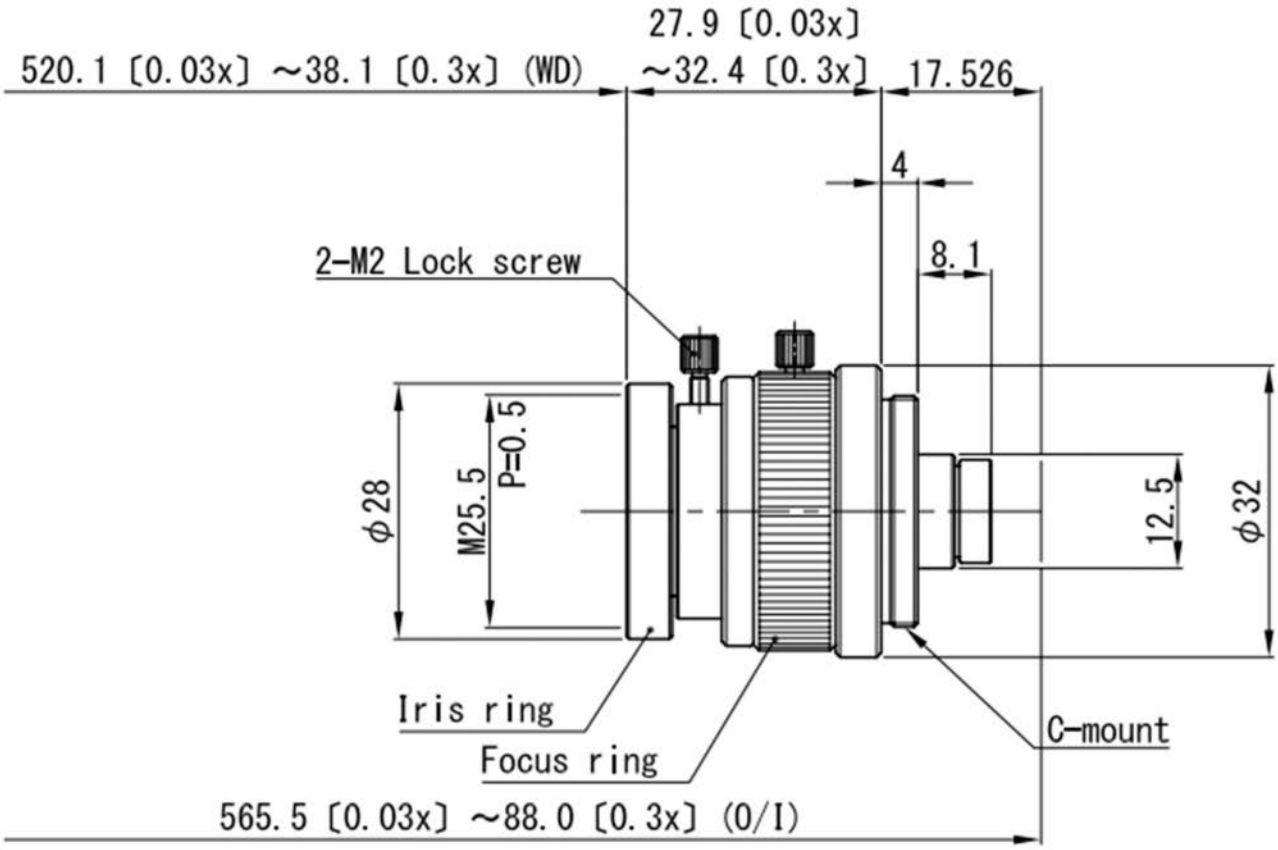
Model		VS-MC00303NS-UV		
Optical Mag. Range		× 0.03 ～ × 0.3		
Optical Mag.		× 0.03	× 0.1	× 0.3
FOV (V x H)	2/3″	-		
	1/2″	160.0 × 213.3 mm	48.0 × 64.0 mm	16.0 × 21.3 mm
	1/3″	120.0 × 160.0 mm	36.0 × 48.0 mm	12.0 × 16.0 mm
WD		520.1 mm	144.1 mm	38.1 mm
O/I (Object & Imager Distance)		565.5 mm	190.6 mm	88.0 mm
Working F/# *Value at Iris Open		4.1	4.4	5.1
NA		0.004	0.012	0.029
DOF at PCoC ϕ0.04mm		373.3 mm	33.6 mm	4.6 mm
TV Distortion (1/2″)		0.00 %		
Relative Illuminance (Y=4)		92 %		
Wavelength		Ultraviolet		
Mount		C-Mount		
Flange Back		17.526 mm		
Sensor Size (max.)		1/2″		
Filter Thread		M 25.5 P= 0.5		
Weight (approx.)		41 g		
Dimension		ϕ 32 (max.) × L = 27.9 (X0.03) ～ 32.4 (X0.3) mm